Paper Recycling Technology

Richard A. Venditti
richard_venditti@ncsu.edu
http://go.ncsu.edu/venditti (more detailed slides, >500)

Paper Science and Engineering
North Carolina State University

Learning objectives

- To be able to describe:
  - trends in the paper recycling industry
  - common contaminants
  - the purpose and operation of common unit operations in a paper recycling mill
  - the major types of paper recycling mills

World Paper Production 2011

(Total Production = 400 million metric tons)

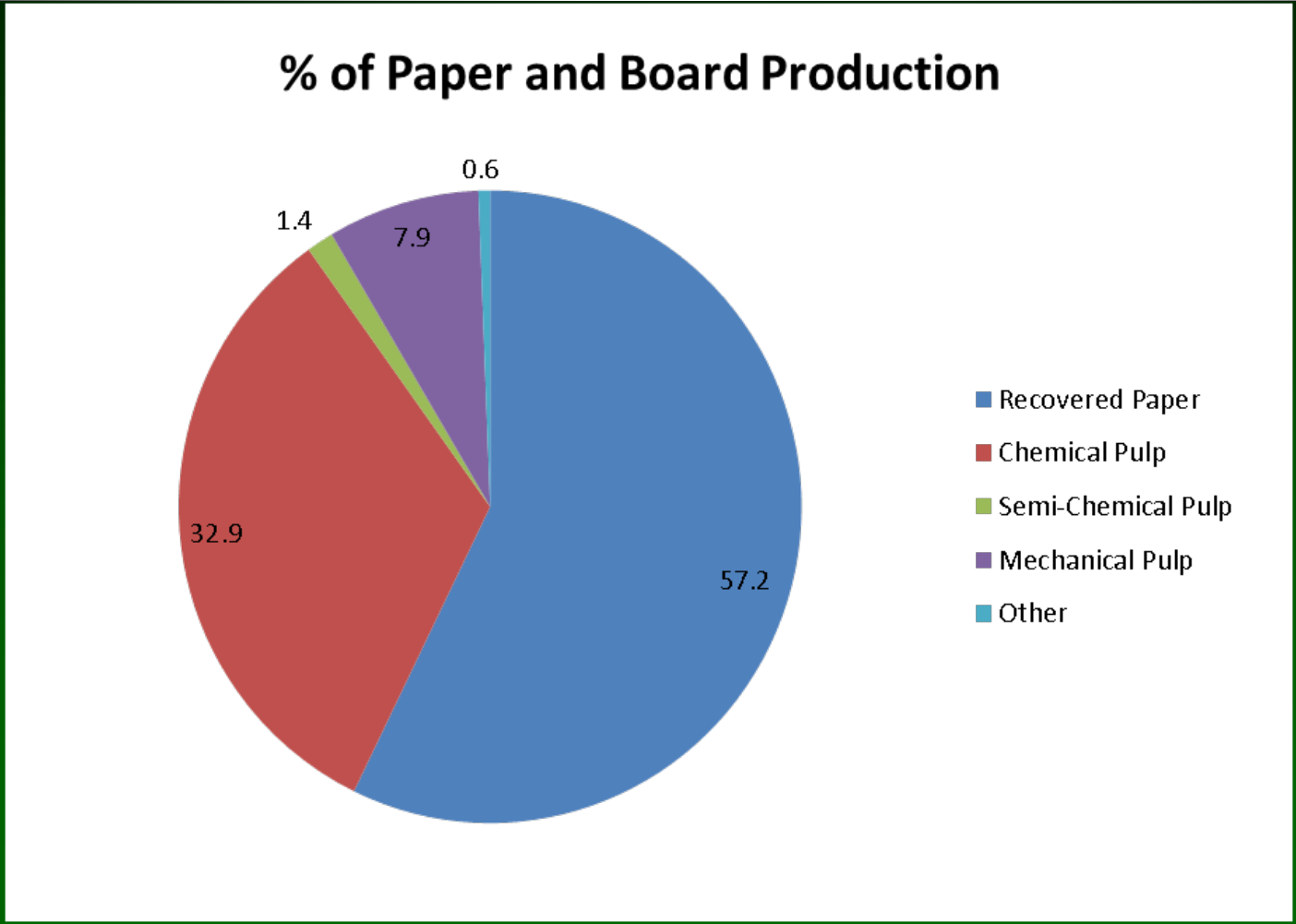

Source: RISI

US Paper Recycling Recovery Rate:

- **1999**
  - **Total Paper Consumption: 105 million tons**
  - **Total Paper Recovered: 47 million tons**
  - **Recovery Rate: = 45%**
- **2004**
  - **Total Paper Consumption: 102 million tons**
  - **Total Paper Recovered: 50 million tons**
  - **Recovery Rate: = 49%**
- **2012**
  - **Total Paper Consumption: 78 million tons**
  - **Total Paper Recovered: 52 million tons**
  - **Recovery Rate: = 65.1%**

Source: afandpa.org, 2011

Paper/board Recovery Rate in the US:

53.4%

In 2010, only 27.1 percent of glass, 19.9 percent of aluminum and 8.2 percent of plastics were recovered – compared to 62.5 percent of paper.

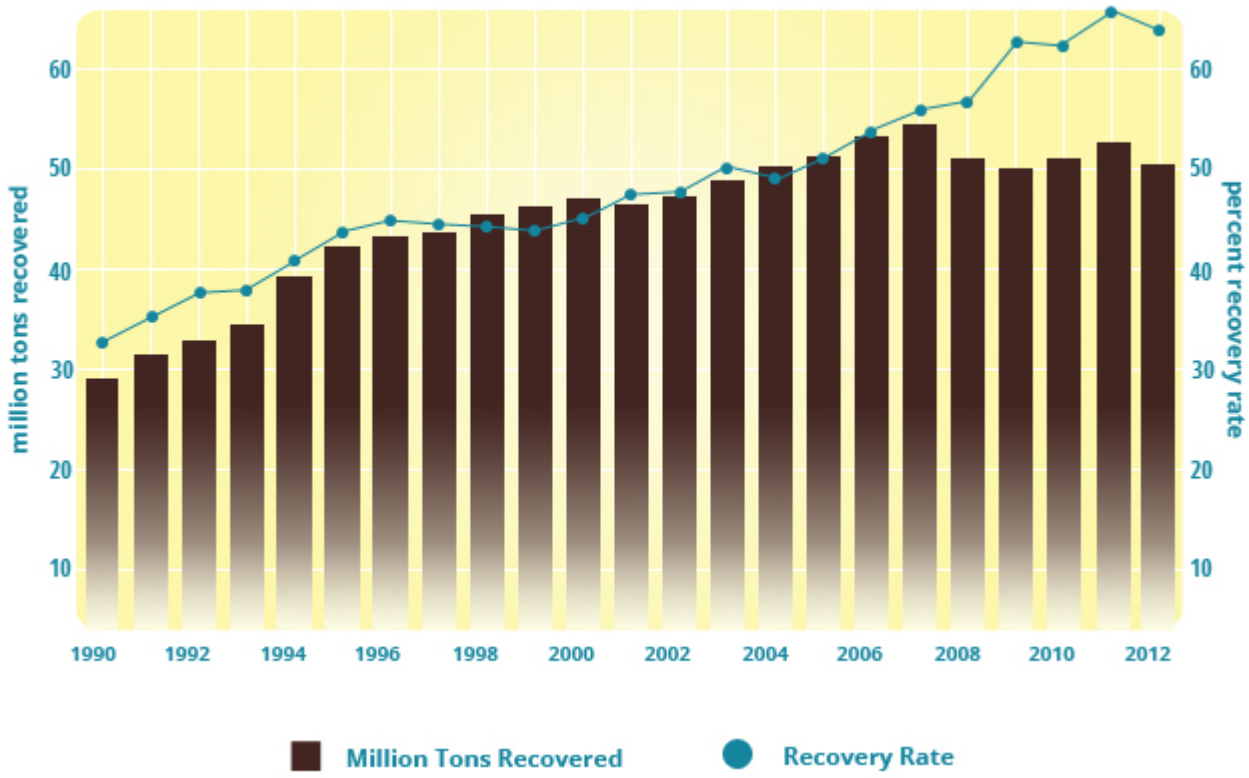

Source: afandpa.org, 2013

Paper/board Recovery Rate in Europe:

53.4%

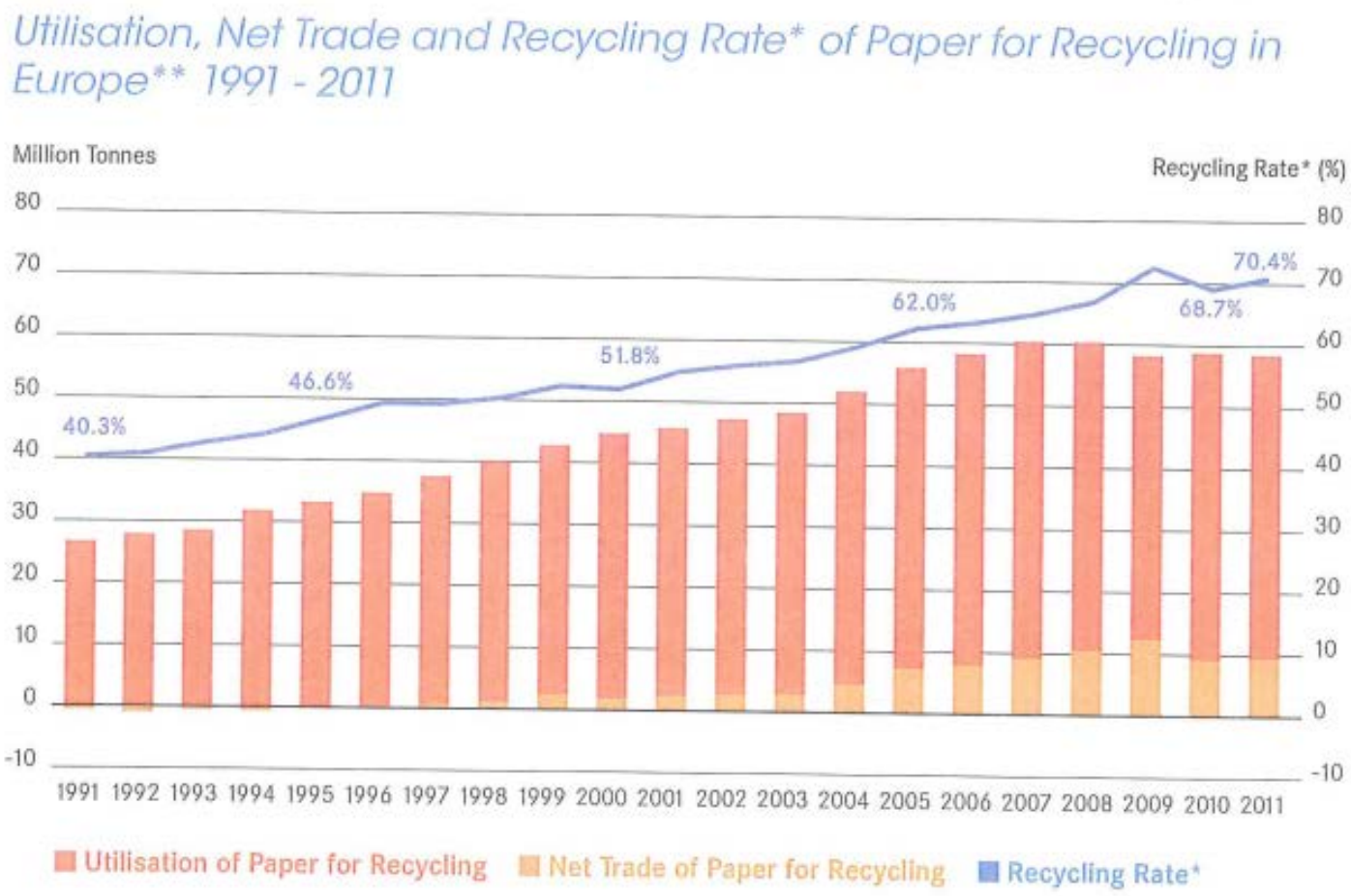

Municipal solid waste

- MSW: everyday items that are discarded by the public
- Also referred to as trash, or rubbish
- Includes packaging, food scraps, grass clippings, sofas, computers, tires and refrigerators, for example.
- Does not include industrial, hazardous, or construction waste.
- Residential waste (houses and apartments): 55-65% of total MSW generation
- Commercial and institutional locations (businesses, schools, hospitals..): 35-45%

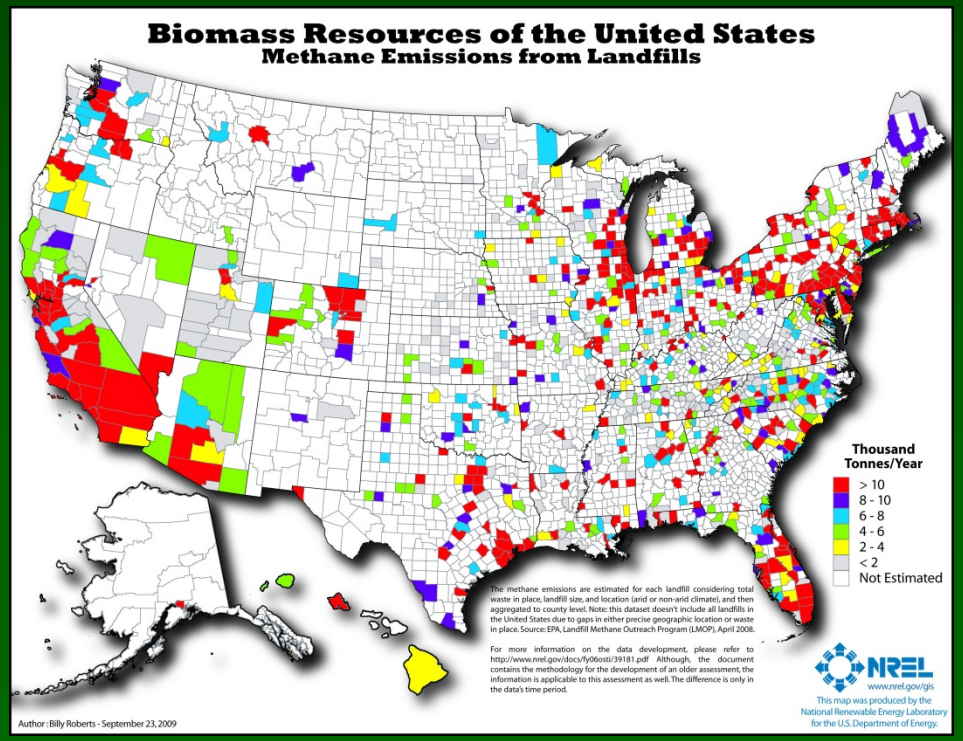

Municipal Solid Waste Generation (US)

Figure 1. MSW Generation Rates, 1960 to 2009

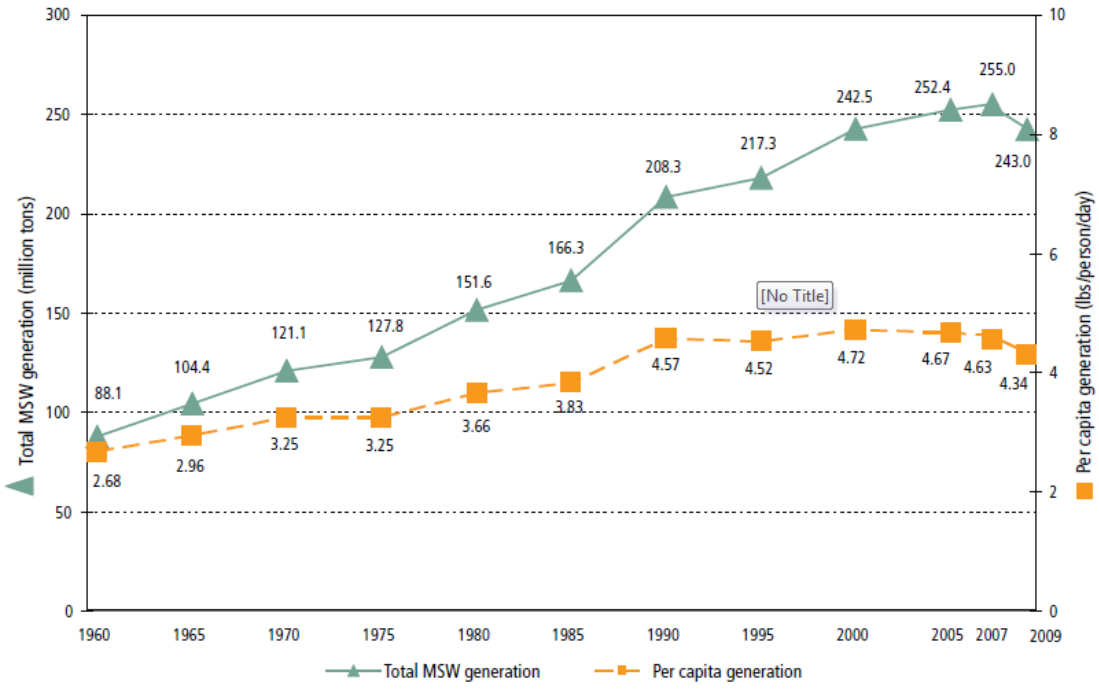

* The previously published 2008 recycling rate, 33.2 percent, was revised to 33.4 percent in this year's report, based on updated data (see Figure 2).

1

Source: EPA
Municipal Solid Waste Generation, Recycling, and Disposal in the United States: Facts and Figures for 2009

MSW by Material Before Recycling

Figure 5. Total MSW Generation (by material), 2009
243 Million Tons (before recycling)

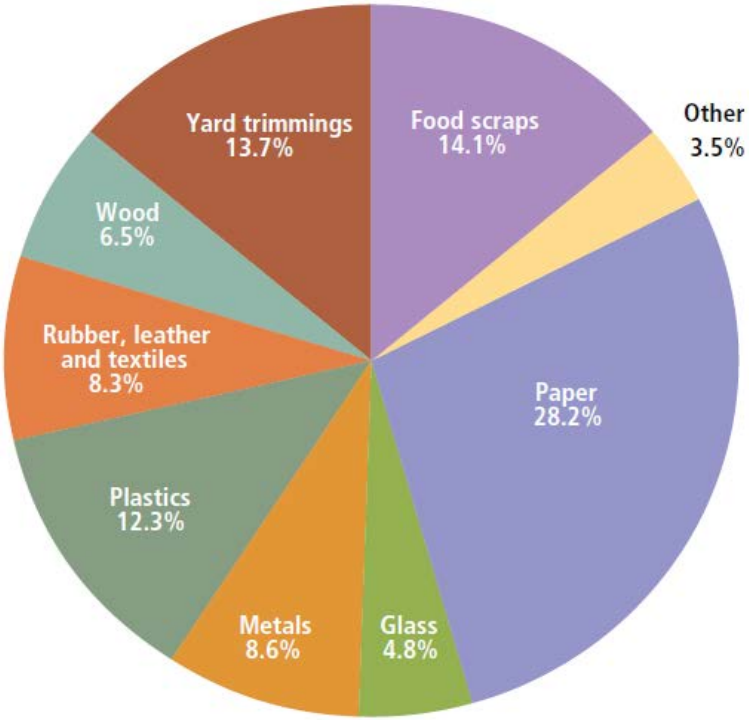

Source: EPA
Municipal Solid Waste Generation, Recycling, and Disposal in the United States: Facts and Figures for 2009

Products with highest % recovery.

- Lead acid batteries, 96%
- Corrugated boxes, 85%
- Newspapers, 72%
- Steel packaging, 69%
- Major appliances, 65%
- Yard trimmings, 58%
- Aluminum cans, 50%
- Mixed paper, 45%
- *Tires, 35%*
- *Glass Containers, 31%*
- *HDPE, milk containers, 29%*
- *PET Bottles, 28%*

Source: Wikipedia

Source: EPA

Municipal Solid Waste Generation, Recycling, and Disposal in the United States: Facts and Figures for 2009

Recovered and Landfilled Paper

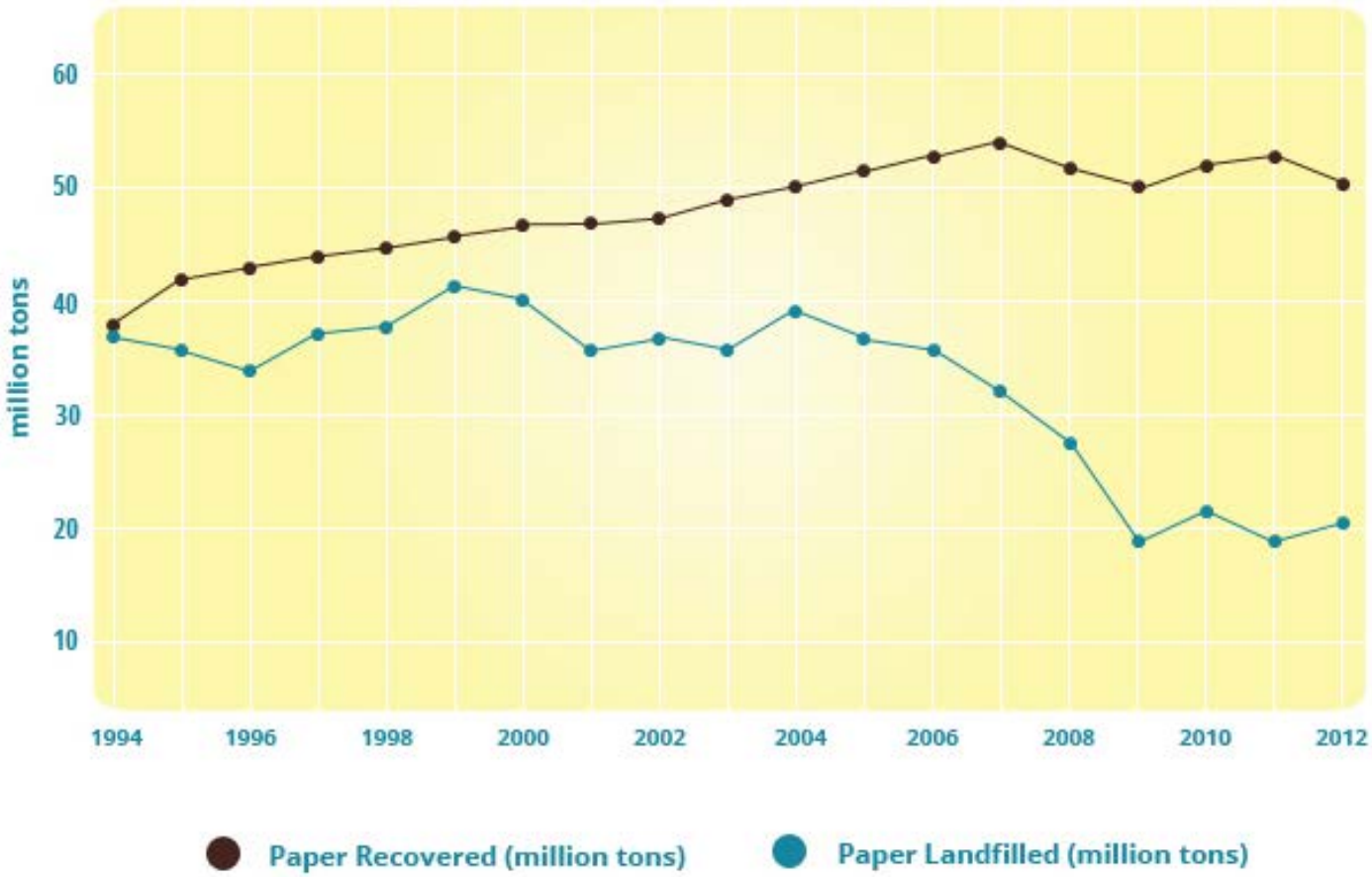

Source: afandpa.org, 2013

Where Recovered Paper Goes:

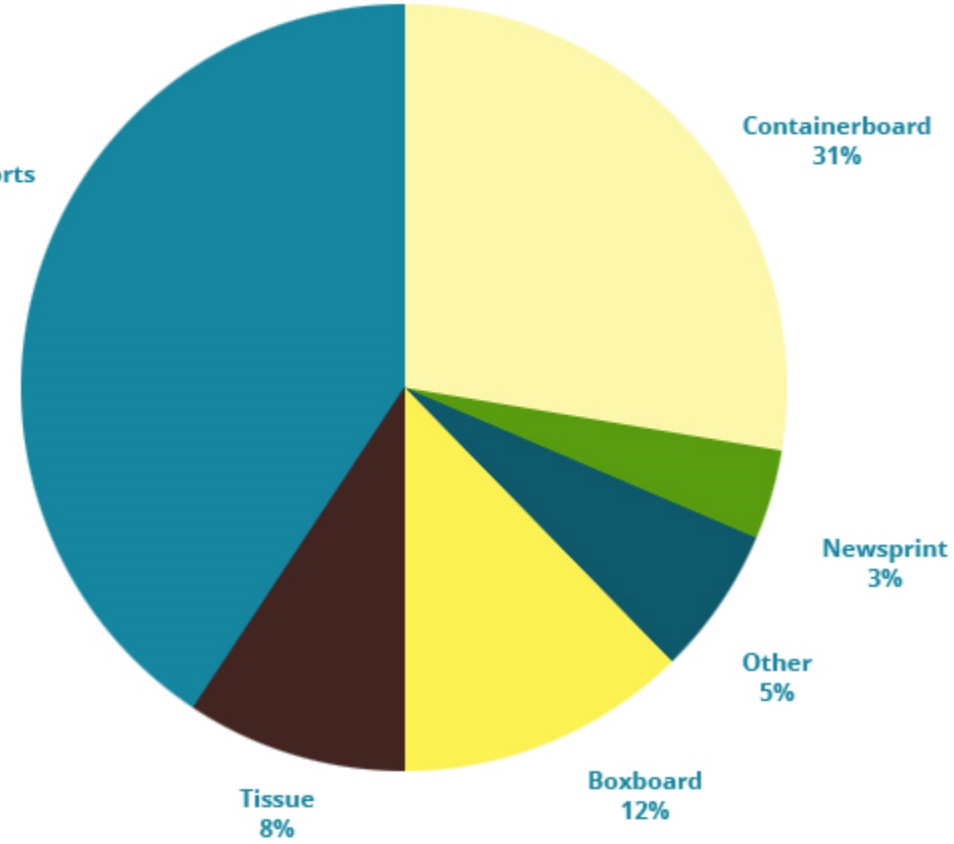

Packaging Type	Thousand Tons Recovered	Share of Total
Newsprint	1,415	3.0%
Tissue	4,298	8.0%
Containerboard	15,717	31%
Boxboard	6,054	12.0%
Other	2,514	5.0%
Net Exports	21,094	41.0%
Total	51,092	100%

2012 data

Annual AF&PA Fiber Survey/U.S. Bureau of Census

Source: afandpa.org, 2013

5 Major Recovered Paper Groups

- **Old Corrugated Containers (OCC),** also known as corrugated cardboard: Mills use old corrugated containers to make new recycled-content shipping boxes, as well as recycled paperboard for product packaging (cereal boxes, shoe boxes, etc.). POST-CONSUMER

- **Old Newspapers (ONP):** Mills primarily use old newspapers to make new recycled-content newsprint and in recycled paperboard and tissue, among other paper grades. POST-CONSUMER

- **Mixed paper:** Mixed paper is a broad category that often includes items such as discarded mail, telephone books, paperboard, magazines, and catalogs. Mills use mixed paper to produce paperboard and tissue, as a secondary fiber in the production of new paper, or as a raw material in non-paper product such as gypsum wallboard, chipboard, roofing felt, cellulose insulation, and molded pulp products such as egg cartons. POST-CONSUMER

- **High Grade Deinked Paper:** This grade is made of high grade paper such as letterhead, copier paper, envelopes, and printer and convertor scrap that has gone through the printing process. It must first be deinked before it can be reprocessed into high grade paper products such as printing and writing papers or tissue. PRECONSUMER

- **Pulp substitutes:** A high grade paper, pulp substitutes are often shavings and clippings from converting operations at paper mills and print shops. Mills can use pulp substitutes in place of virgin materials to make back into high grade paper products. PRECONSUMER

http://www.epa.gov/osw/conserve/materials/paper/basics/grade.htm

Recovery of OCC

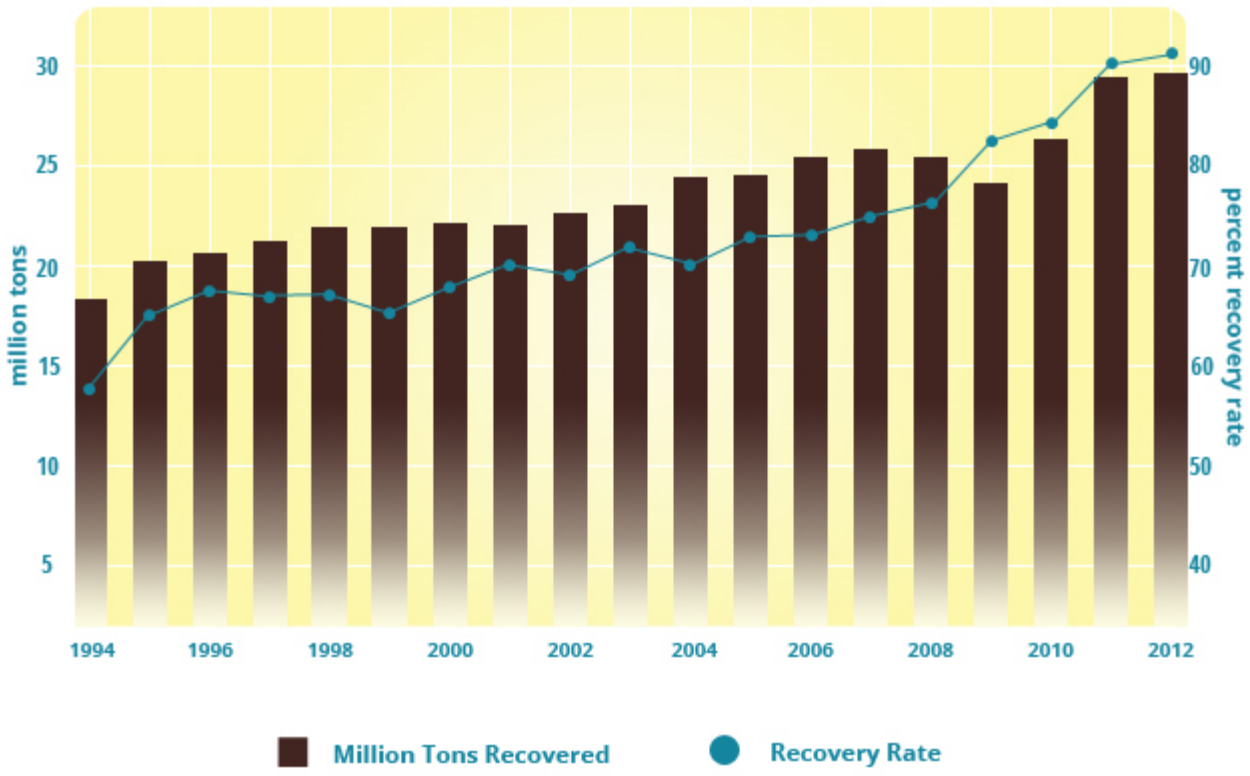

Source: afandpa.org, 2013

Recovery of OCC

	At Paper and Board Mills (000 tons)	Net Exports (000 tons)	Total (000 tons)	Containerboard /Unbleached Kraft Paper Supply (000 tons)	Recovery Rate
1993	13,562	2,338	15,900	29,200	54.5%
1994	15,009	3,240	18,249	31,049	58.8%
1995	16,513	3,894	20,407	31,402	65.0%
1996	18,732	2,847	21,579	31,485	68.5%
1997	19,641	2,381	22,022	32,525	67.7%
1998	19,530	2,582	22,112	32,703	67.6%
1999	20,457	2,189	22,646	34,454	65.7%
2000	19,968	2,750	22,718	33,070	68.7%
2001	19,348	2,923	22,271	31,732	70.2%
2002	19,627	3,546	23,173	33,169	69.9%
2003	19,294	4,386	23,680	32,549	72.8%
2004	19,926	4,123	24,049	34,349	70.0%
2005	20,024	4,665	24,689	33,603	73.5%
2006	19,967	5,218	25,185	34,212	73.6%
2007	20,159	5,418	25,577	34,083	75.0%
2008	19,161	6,036	25,197	32,455	77.6%
2009	17,415	6,836	24,251	29,490	82.2%
2010	19,327	7,637	26,964	31,954	84.4%
2011	19,339	9,784	29,123	32,137	90.6%
2012	19,057	10,077	29,134	32,030	91.0%

Source: afandpa.org, 2013

Recovery of ONP (mechanical)

*Includes newsprint, uncoated mechanical papers and coated newspaper inserts.

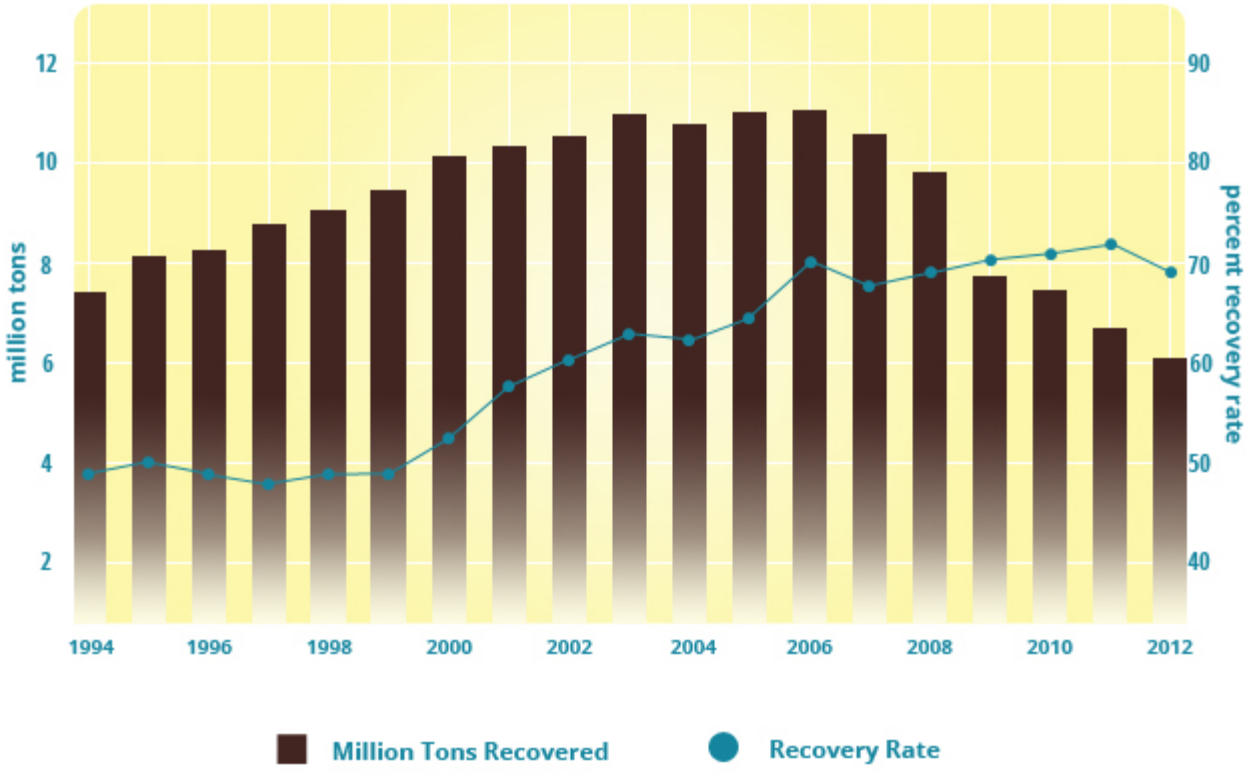

Source: afandpa.org, 2013

Recovery of ONP (mechanical)

	At Paper and Board Mills (000 tons)	For Molded Pulp and Other Uses (000 tons)	Total Net Exports (000 tons)	Total (000 tons)	Total Newsprint Supply (000 tons)	Recovery Rate
1993	4,670	912	1,706	7,288	15,578	46.8%
1994	5,090	975	1,810	7,875	15,813	49.8%
1995	4,885	1,043	2,096	8,023	15,832	50.7%
1996	4,977	1,115	2,237	8,329	16,971	49.1%
1997	5,273	1,192	2,381	8,847	18,266	48.4%
1998	5,312	1,275	2,624	9,211	18,613	49.5%
1999	5,243	1,500	2,793	9,536	19,152	49.8%
2000	5,512	1,650	2,897	10,059	19,221	52.3%
2001	5,784	1,650	2,827	10,261	17,414	58.9%
2002	5,675	1,650	3,167	10,492	17,464	60.1%
2003	5,474	1,650	4,005	11,129	17,404	63.9%
2004	5,596	1,575	3,764	10,935	17,542	62.3%
2005	5,446	1,500	4,122	11,068	17,175	64.4%
2006	5,552	1,369	4,200	11,121	15,888	70.0%
2007	5,016	964	4,606	10,586	15,397	68.8%
2008	4,593	559	4,623	9,775	14,120	69.2%
2009	3,607	225	3,780	7,612	10,829	70.8%
2010	3,671	225	3,513	7,409	10,360	71.5%
2011	3.226	225	3,474	6,925	9,552	72.7%
2012	2,662	225	3,226	6,113	8,680	70.4%

Source: afandpa.org, 2013

Recovery of Printing Writing Papers

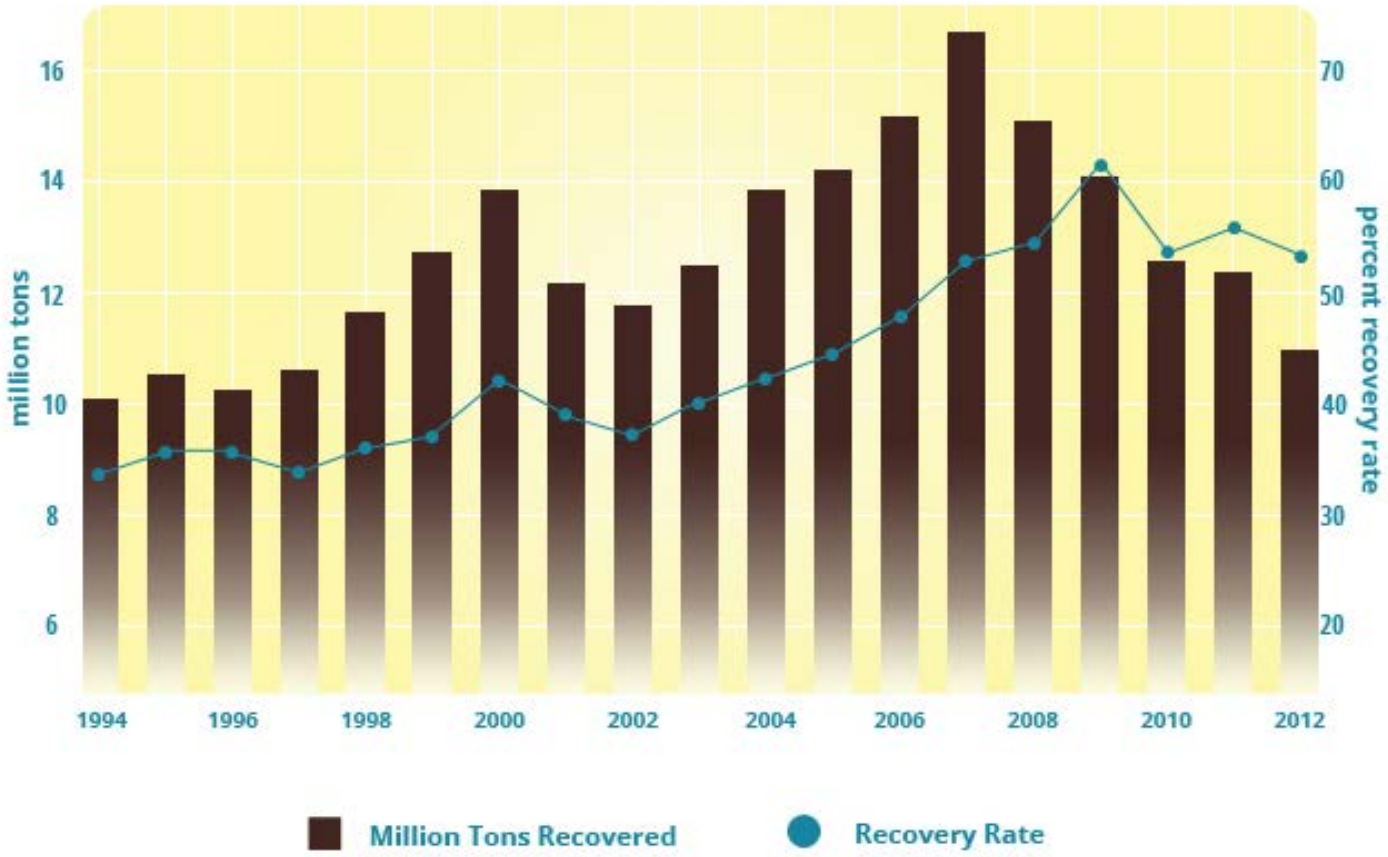

Source: afandpa.org, 2013

Recovery of Printing Writing Papers

	Printing-Writing Paper Supply (000 tons)	Total Recovered (000 tons)	Recovery Rate
1994	29,444	10,070	34.2%
1995	29,550	10,770	36.4%
1996	28,300	10,220	36.1%
1997	30,750	10,710	34.8%
1998	31,384	11,825	37.7%
1999	32,616	12,695	38.9%
2000	33,078	13,910	42.1%
2001	30,383	12,030	39.6%
2002	30,944	11,765	38.0%
2003	31,010	12,560	40.5%
2004	32,711	13,940	42.6%
2005	32,020	14,135	44.1%
2006	32,398	15,696	48.4%
2007	31,045	16,618	53.5%
2008	28,060	15,350	54.7%
2009	23,028	14,038	61.0%
2010	23,732	12,828	54.1%
2011	22,457	12,640	56.3%
2012	21,188	11,542	54.5%

Source: afandpa.org, 2013

Recovered Paper Prices, $/short ton, FOB sellers dock

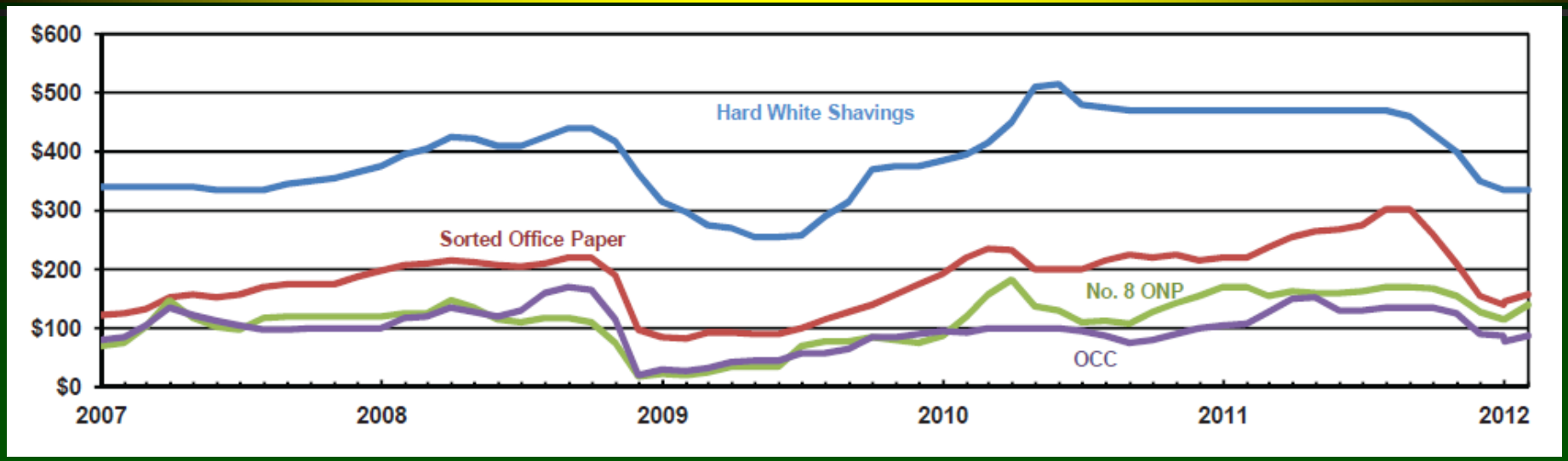

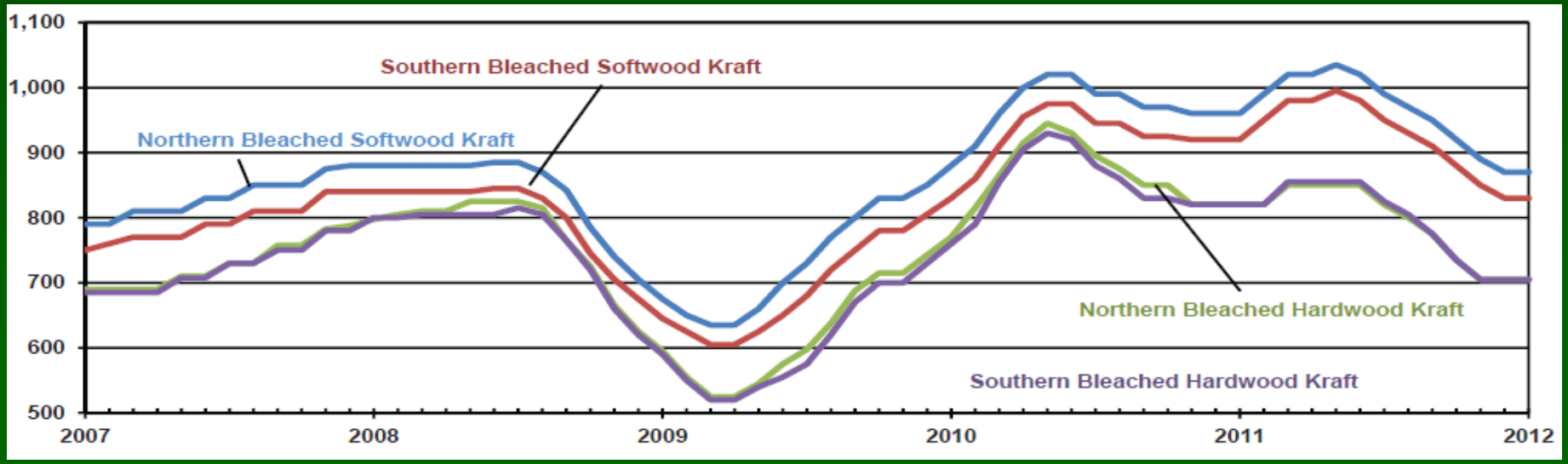

Recovered Paper Prices, $/ton

Grades	LTL 2/08	TL 2/08	LTL 2/09	TL 2/09	TL 1/10
Corrugated Cardboard	48	130	20	55	125
Old Newsprint	36	108	18	54	100
Box Board	33	90	17	45	
Old Magazines (OMG)	8	24	4	12	
Mixed Paper	9	28	8	25	75
Sorted Office Paper	64	104	57	93	
White Ledger	114	266	102	238	
White Envelope	135	370	121	331	

Overview of the Paper Recycling Industry: Review Quiz

- The percentage of paper in the US that is recycled overall is about ___ %
- The amount of **paper** produced in the US has been _____ in the last decade.
- The US is a net importer / net exporter of recovered paper
- Which major group of recovered paper is recycled the most based on annual tonnage? _____

Learning Objectives

- To be able to describe:
  - the trends of paper recycling
  - ***Common Contaminants***
  - the purpose and operation of common unit operations in a paper recycling mill
  - the major types of paper recycling mills

Common Contaminants in Recovered Paper

- **Large Junk**
  - **metals: nuts, screws, foil, cans**
  - **plastics: films, bags, envelopes**
  - **dirt, cloth, yard waste, leather, etc.,**
- **Inks & toners**
- **Stickies -- most difficult problem currently**
- **Coatings – can appear as white/colored chips,**
- **Wax Coatings – present in some boxes**
- **Fillers – damaging to the tissue creping process**
- **Papermaking additives – dyes, wet strength agent**

Inks & Toners

Type	Component	Drying System	Ink Resin Film	Particle Size (microns)	End Products
Simple Letter Press	Pigment + Mineral Oil	Absorption into Web	Weak	1-15	Letterpress Early Newsprint
Newsprint and Offset	Pirgment + Soft Resin & Mineral Oil	Penetration of Vehicle into Web + Resin Oxidation	Soft Film Hard Film	2-30	Newsprint, Books We Offset, Letter Press
Rotogravure	Pigment +Hard Resin & Solvent	Solvent Evaporation	Hard Film	2-250	Magazines, Catalogues
Flexographic	Pigment + Resin & Water Emulsification	Amine Absorption, Evaporation	Water Resistant Film	small	Newsprint inserts, Corrugated
UV Cured	Pigment +Monomer	UV Photopolymerization	Non swelling, Non saponif. Hard Film	50-100	High Speed Coated Papers
Specialty	Various Pgiments and Rosins	Heat set or Other	Hard, Coherent Films	40+	Xerography Laser Printers Electronic Forms

Stickies

- Currently the most challenging problem in paper recycling
- Stickies: contaminants in pulp that have the potential to deposit on solid surfaces
- Typically organic materials:
  - Man made stickies: adhesives, coatings…
  - Natural stickies: pitch, resins..
- May deposit on papermachine wires, press felts, dryer fabrics, calendar rolls and cause significant down-time on machine
- Are hard to remove in recycling due to often having a neutral density, and an ability to flow and change shape

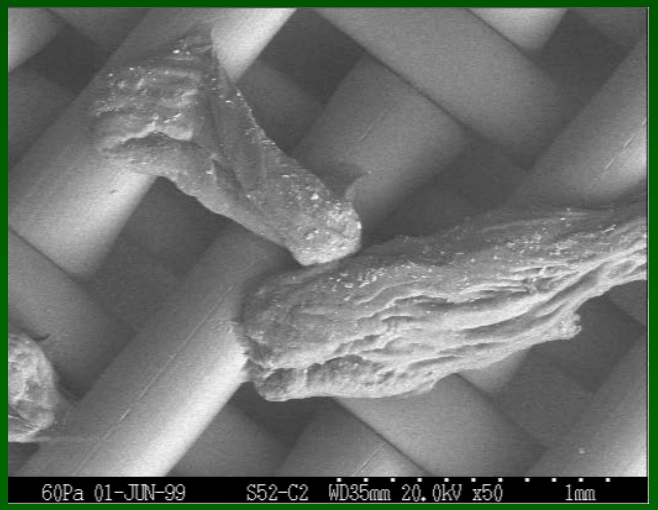

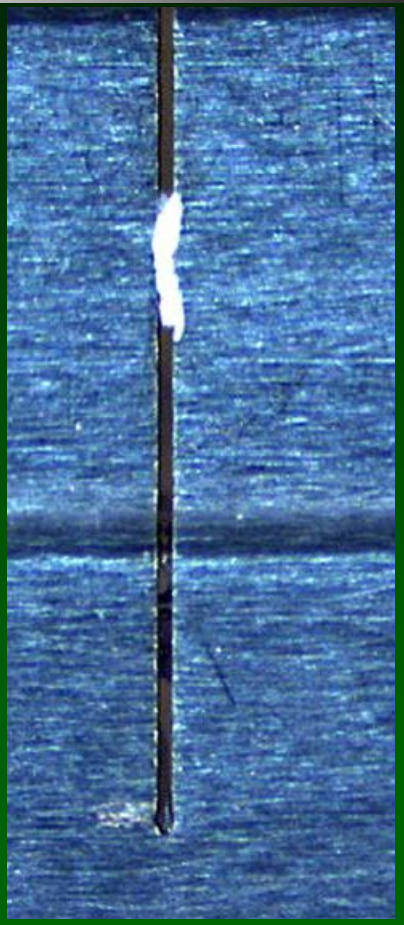

Why is contaminant removal so difficult?

- Contaminates vary by
  - size
  - density
  - shape
  - surface properties
  - solubility
  - strength
- No single separation device can remove all of the different types of contaminants
- Thus, recycling processes consist of many sub-operations that complement each other

Contaminant Removal

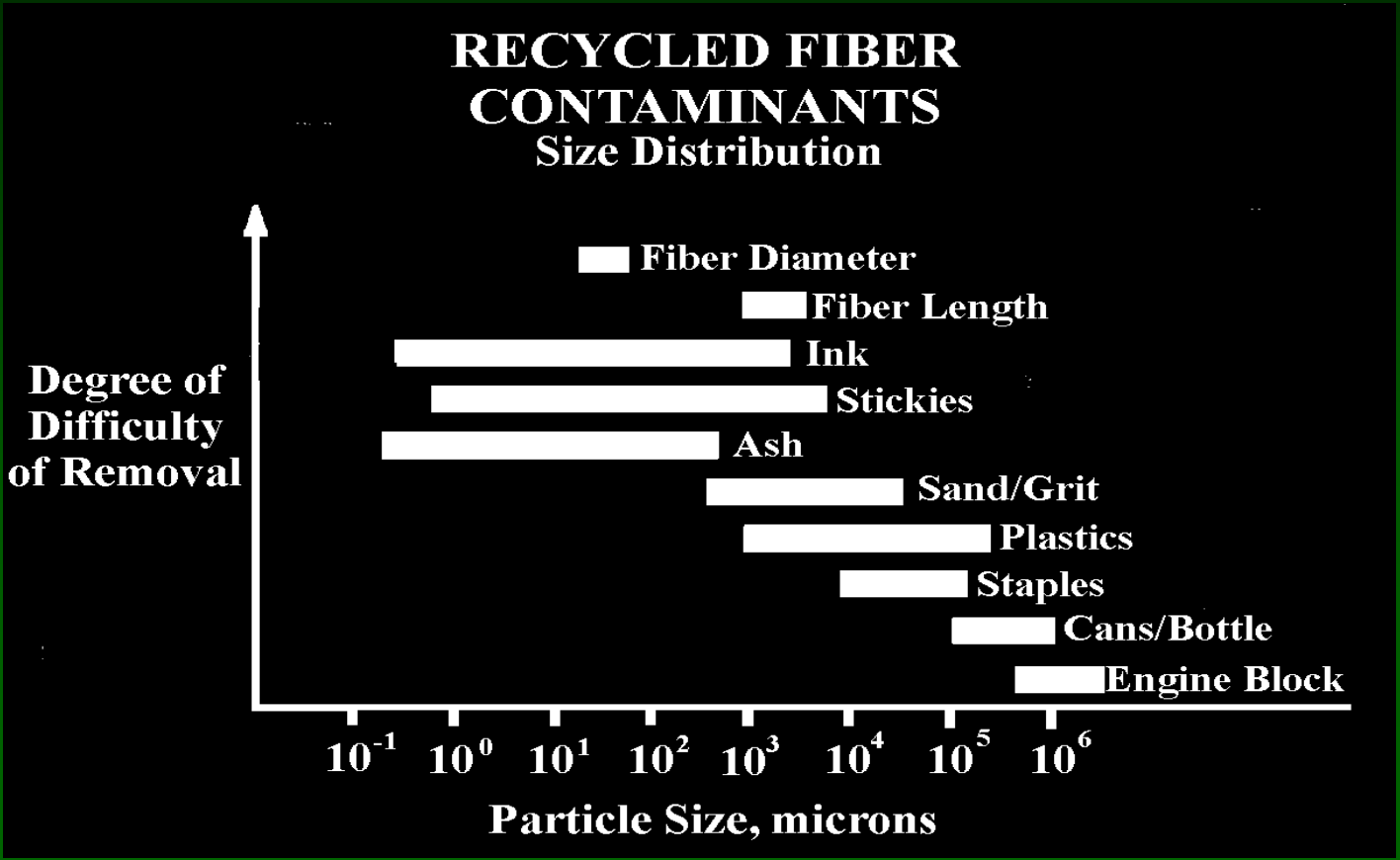

Contaminant Size vs. Removal Efficiency

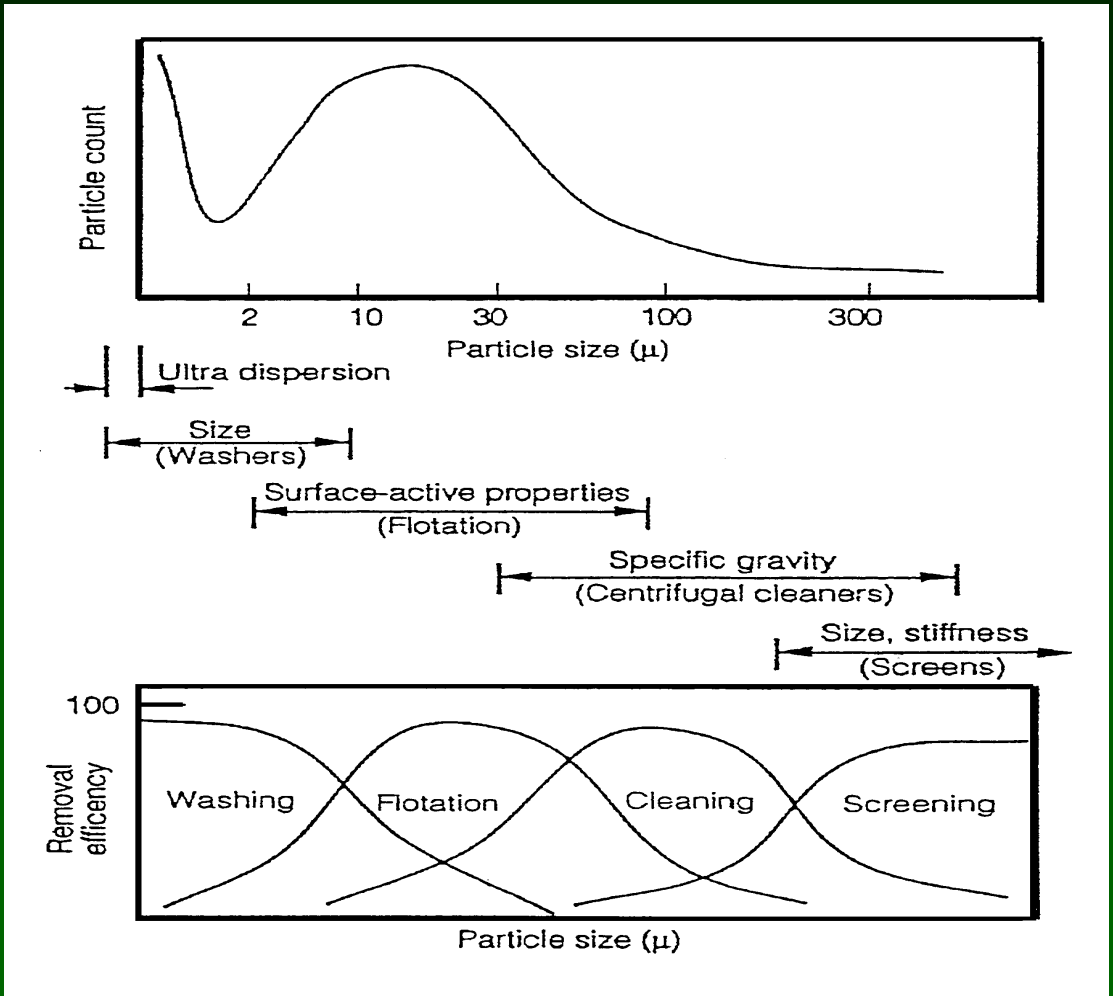

Major Recycling Unit Operations

- Pulping
- Cleaning
- Screening
- Deinking --- used to produce printing or tissue, not OCC or similar
  - Washing
  - Flotation
- Dispersion and Kneading
- Bleaching --- used to produce printing or tissue, not OCC or similar

- Water Treatment
- Solid Waste Handling

High Grade Printing and Writing Grades

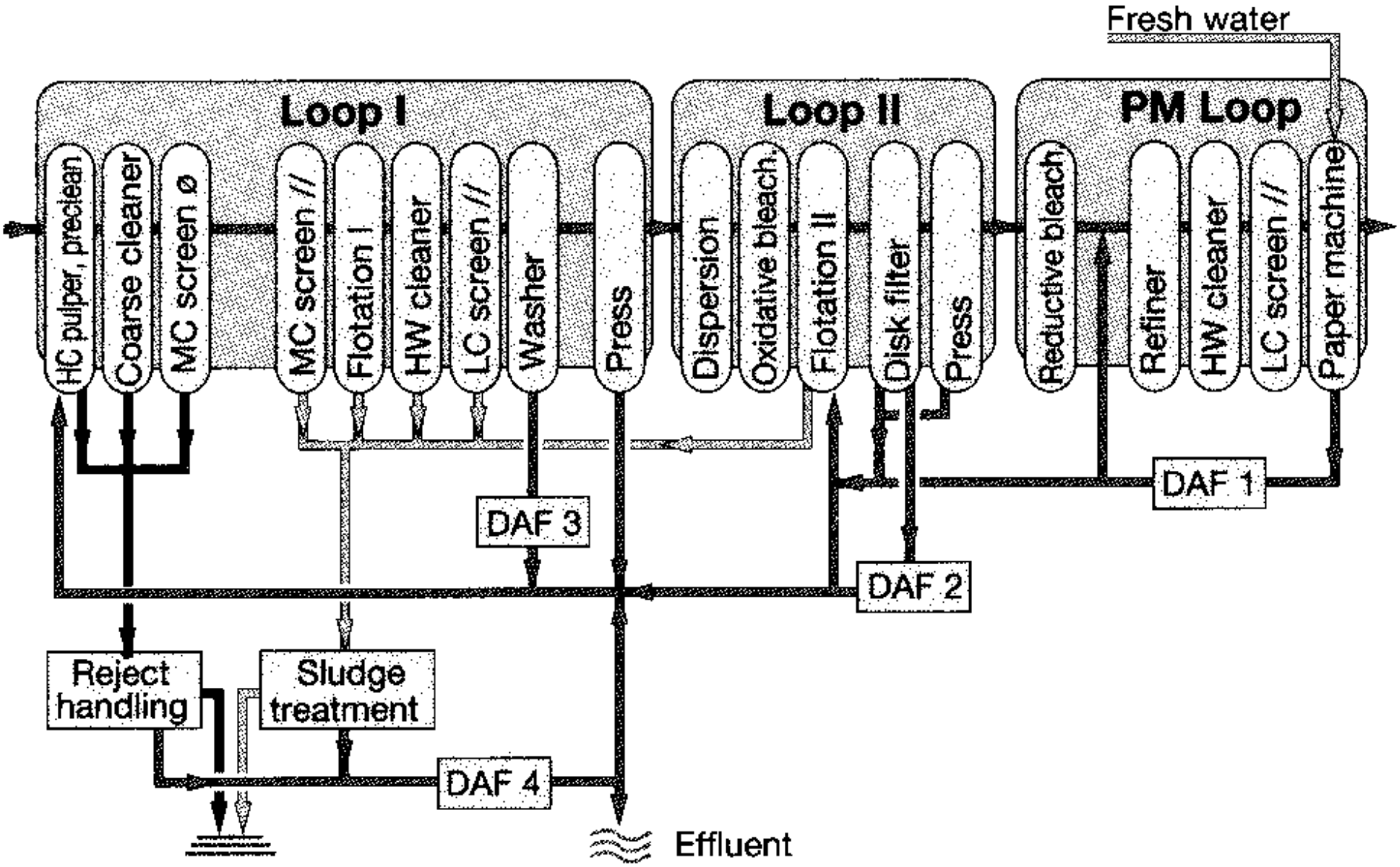

Learning Objectives

- To be able to describe:
  - the trends of paper recycling
  - Common Contaminants
  - ***the purpose and operation of common unit operations in a paper recycling mill***
  - the major types of paper recycling mills

Pulping

Main Function：Disperse recovered paper into separated fibers.

Several sub-objectives that are also important:

1. Detach contaminants from fibers.

2. Mix paper with water and chemicals at the correct ratios.

3. Maintain contaminants as large as possible to aid subsequent removal processes.

4. Avoid damage to the fibers (fiber cutting).

5. Removal of large debris from system.

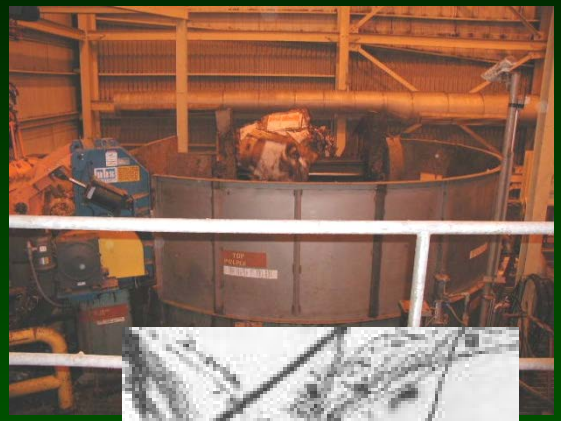

Low Consistency Pulping: Harsh, used for OCC

- Consistency from 3 -6 %.
- Low profile rotor that rotates at high speeds.
- Motion of rotor causes a vortex of pulp stock. The baffles are used to improve mixing.
- High mechanical force due to impacts of rotor can damage fiber and break contaminants.
- 100 kWh/t (6.8 cents/kWh)

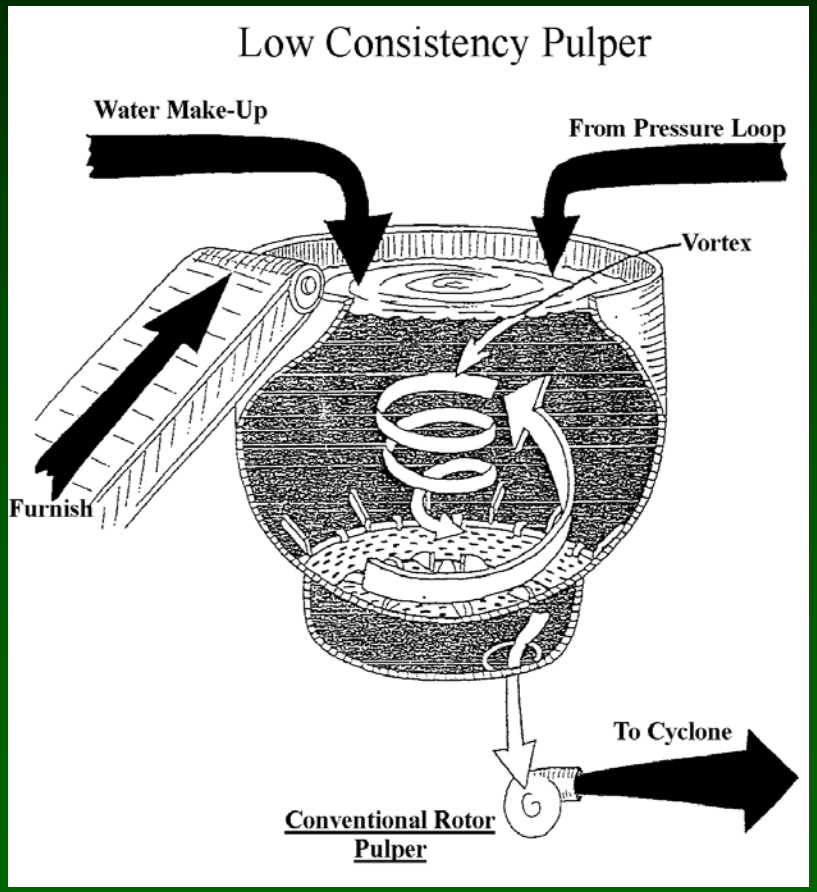

Continuos Low Consistency Pulper with Ragger and Junk Tower

- Low consistency continuos pulper typically have an extraction plate that accepts pulped fibers and rejects debris and unpulped flakes.
- The extraction plate/ rotor can cause attrition, resulting in fiber cutting.
- A junker is used to collect unpulpables such as bolts or rocks. This debris is thrown out of the pulper into a junk tower where it is removed.
- A ragger is also used in many cases to remove bale wire, strings, plastics, etc. The ragger is a continuos “rope” formed by entangled debris. The “rope” is continously pulled out of the pulper and cut into sections and disposed. Common in OCC mills.

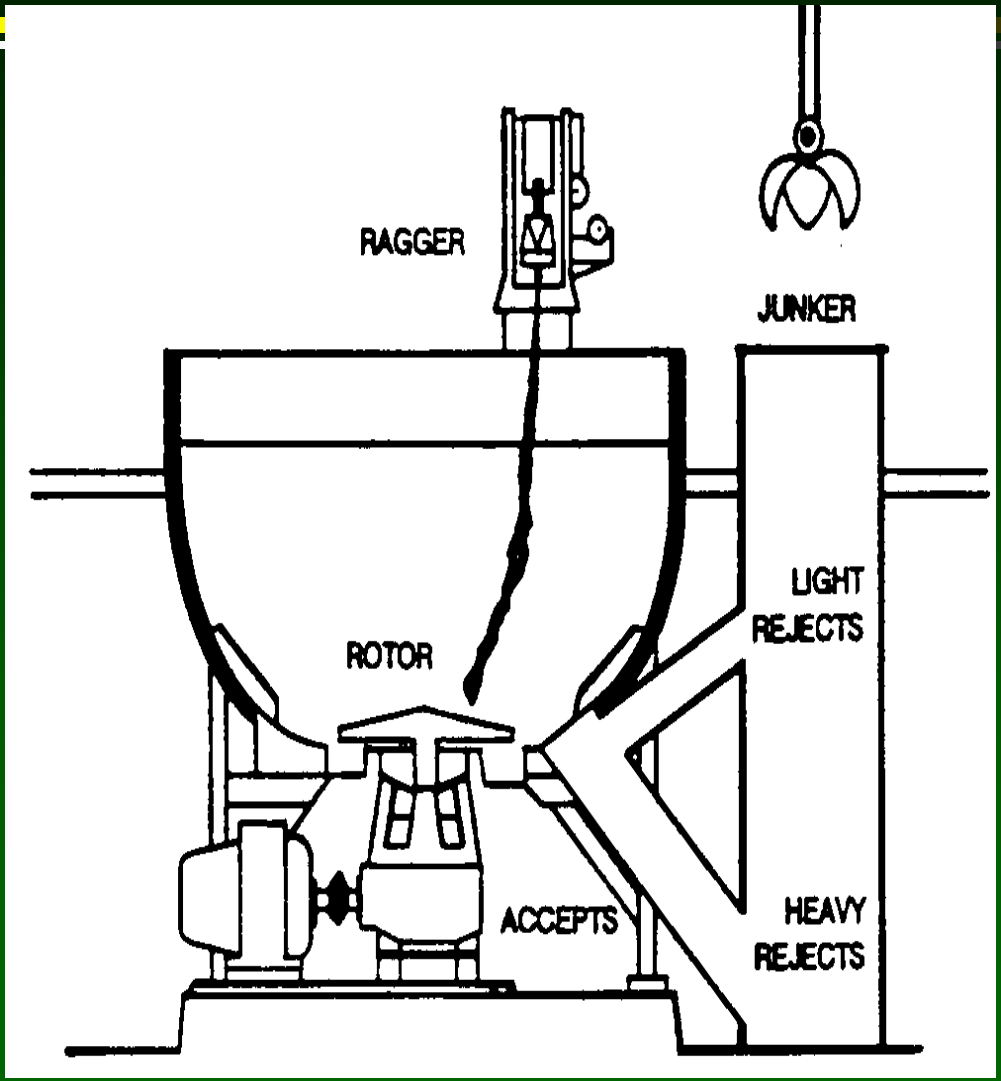

Wire bale cutter

Low Consistency Continuous Pulping

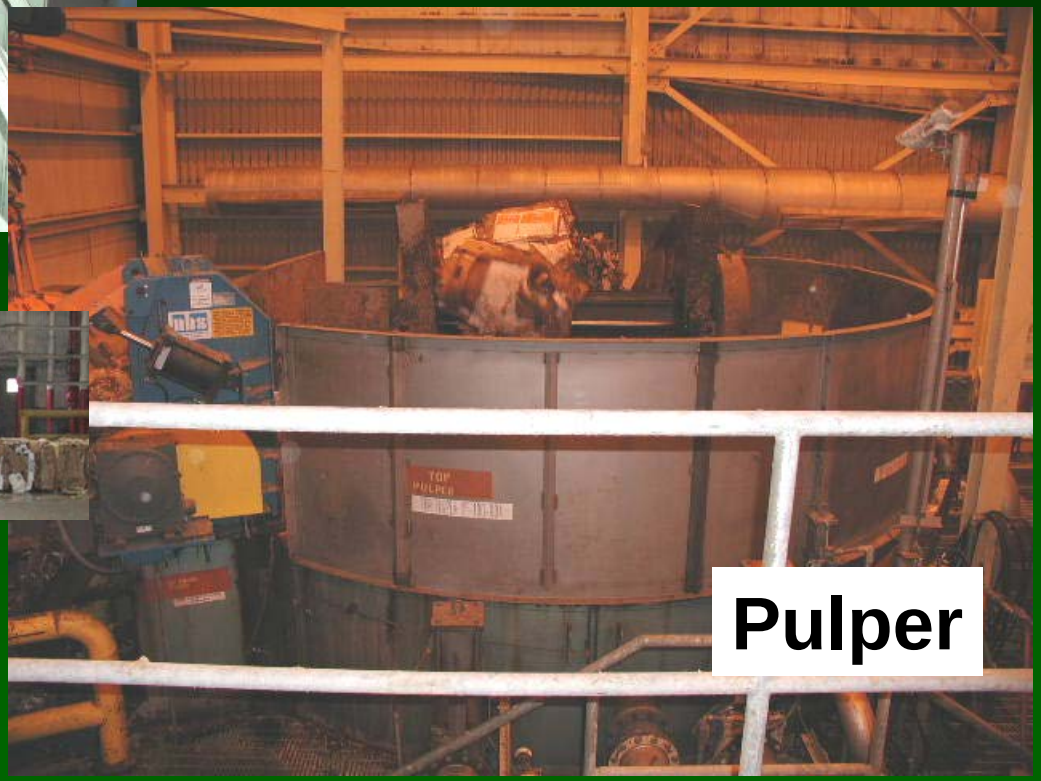

Pulper

Warehouse

Ragger removing debris from the pulper surface

Junker Claw

Low Consistency Continuous Pulping

Pulper Types: High Consistency: Mild: Used for Printing Grades

- Typically 8-18 %.
- High profile rotor used. The helical screw type rotor is needed to “pull down” the non-fluid like high % K stock, from the top to the bottom of the pulper.
- At the high % K, fiber-fiber (solid-solid) rubbing dominates the forces experienced in the pulper.
- 30 kWh/t

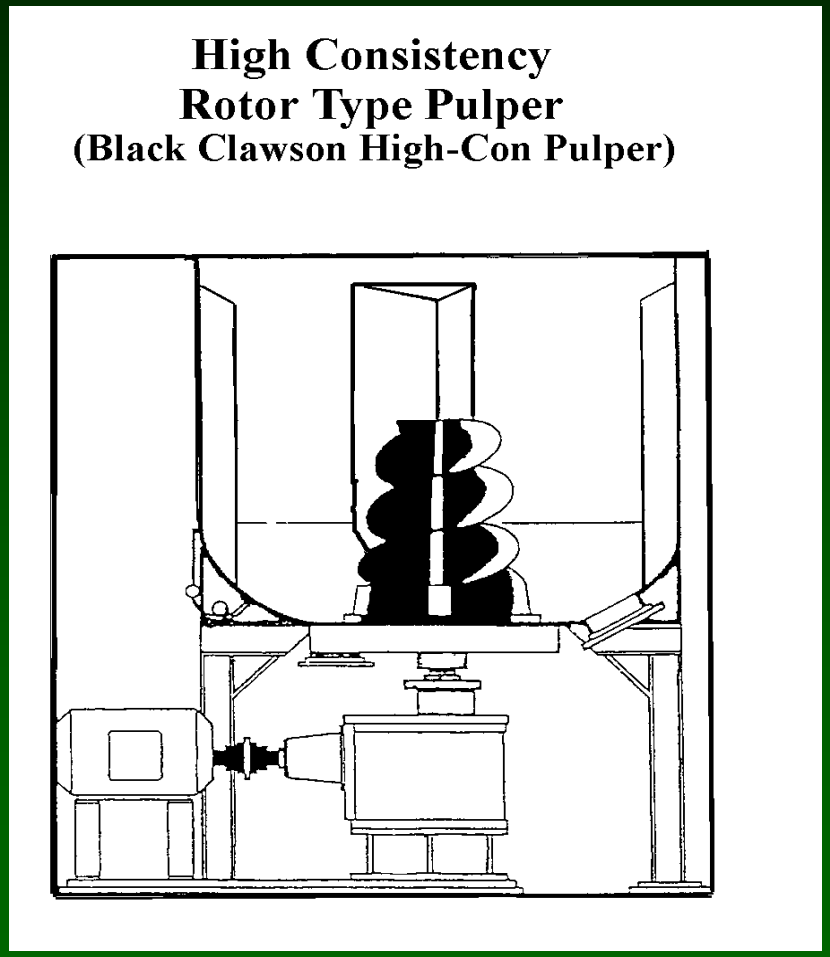

High Consistency Batch Pulper with External Detrasher

- The pulper is “full” at high consistency during pulping.
- At the end of the pulping dilution water is added at the bottom of the pulper diluting the pulp in the bottom to less than 6 %.
- A large opening on the bottom/side of the pulper is used as the exit for the pulper contents.
- The pulp and debris are separated by an external detrasher.
- Note : There is no extraction plate in the pulper.

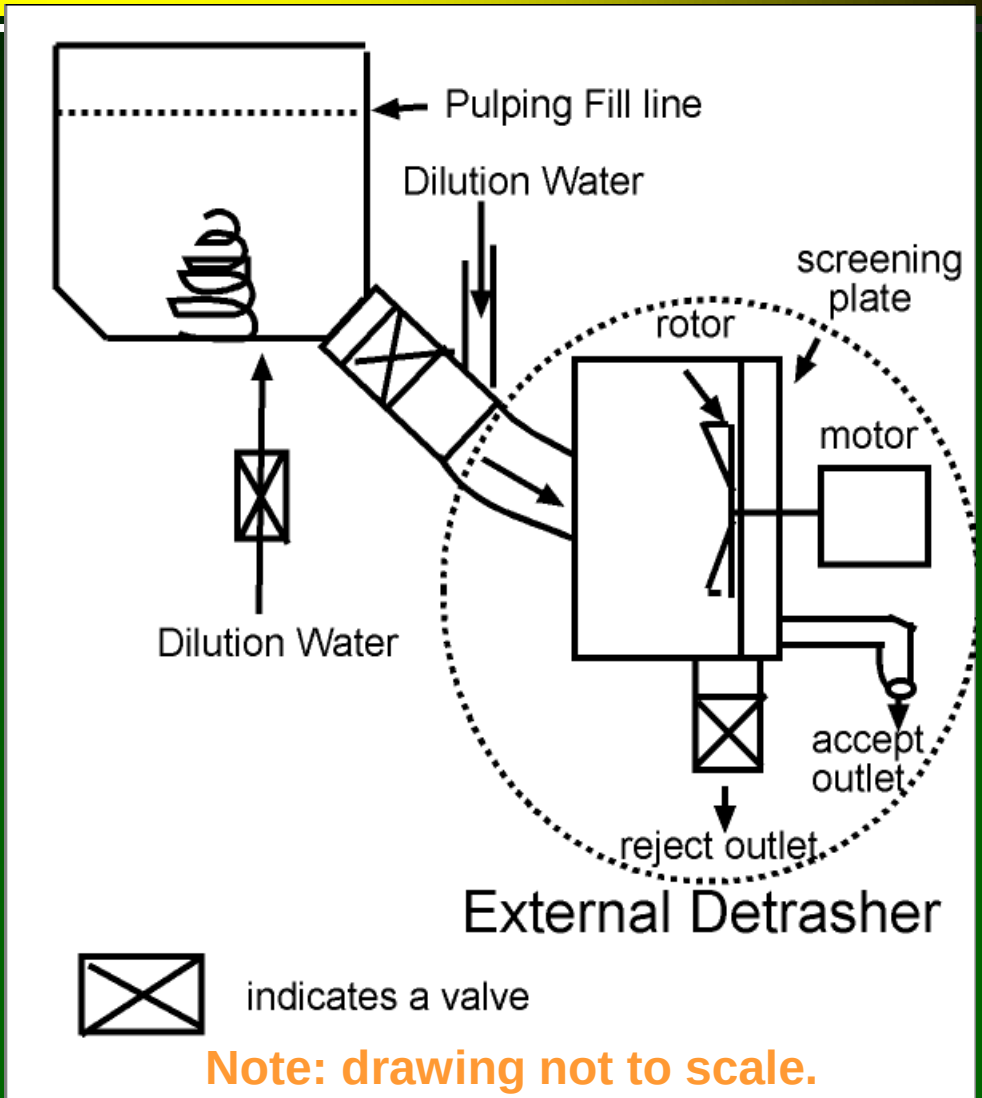

Screening and Junk Removal in Pulper

- One of the sub- objectives of pulping is to remove large debris that enters the system.
- Examples of large debris :
  - wood
  - wet-strength paper
  - plastics
  - baling wire
  - nails and bolts
- The removal of debris serves two important functions.
  - Protects equipment downstream from damage.
  - Prevents plugging of downstream equipment.

Examples of Debris Removal Methods

- Different pulpers have different methods to remove debris, examples of common methods follow.

- High Consistency Batch Pulping
  - HC pulper with Dilution Zone
  - HC pulper with Detrasher

- Low consistency Pulping
  - Continuos Low consistency pulper with Ragger and junk tower.
  - Continuos Low consistency pulper with a de-trashing system

Pulping Summary

- High consistency pulping used on _____
- Low consistency pulping used on _____
- Pulping Objectives:
  - _____
  - _____
  - _____
  - _____

- Deep Thought: If pulping is not done properly, subsequent processing steps will be ineffective and product quality will be unacceptable

Screening

- Screening separates contaminants based mainly on **size**, but also on shape and deformability
- Performed by presenting a barrier for large contaminants (slots or holes) that allow fibers to pass through

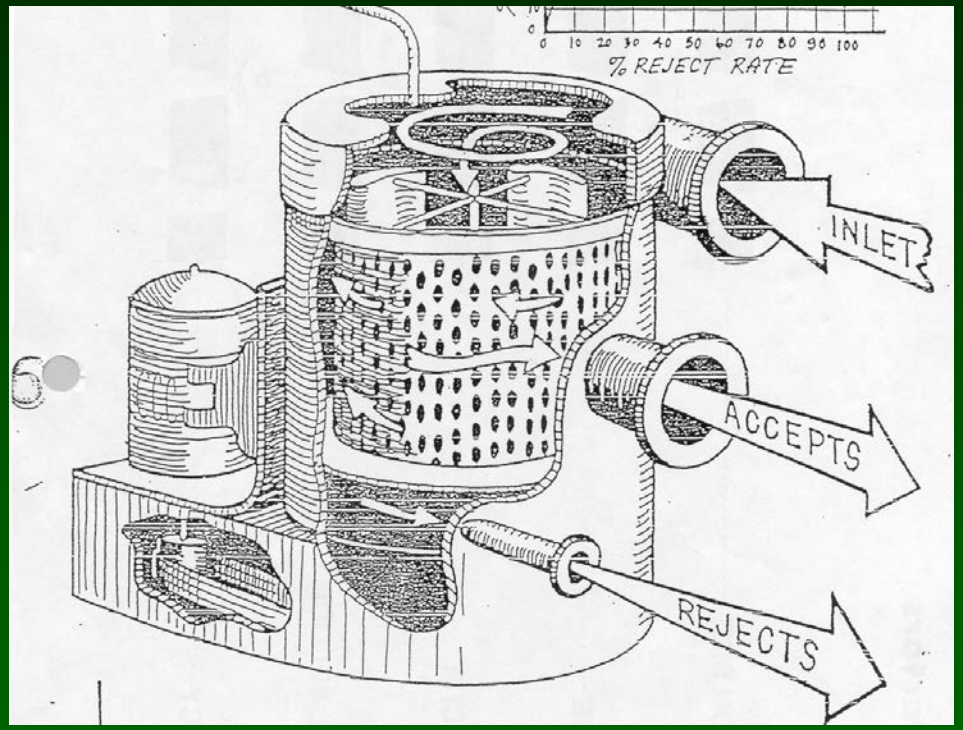

Screening

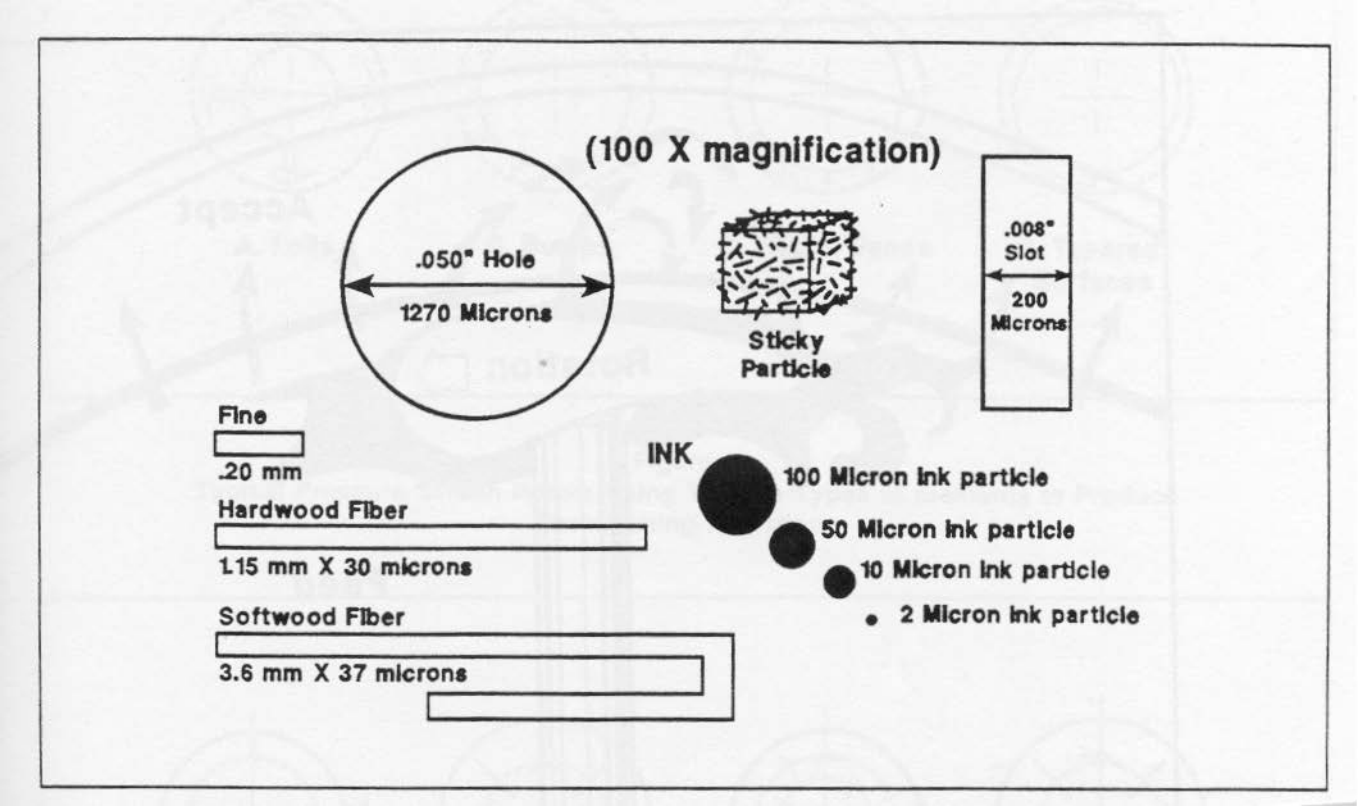

One meter has 1,000,000 microns. 0.001 inch equals approx 25 microns
A HW fiber has a width of about 20, a SW about 40 microns.

Screening

- Types of perforations
  - coarse holes .110 in or 2.7 mm
  - fine holes .060 in or 1.52 mm
  - coarse slots .010 in or .254 mm
  - fine slots .006 in or .152 mm

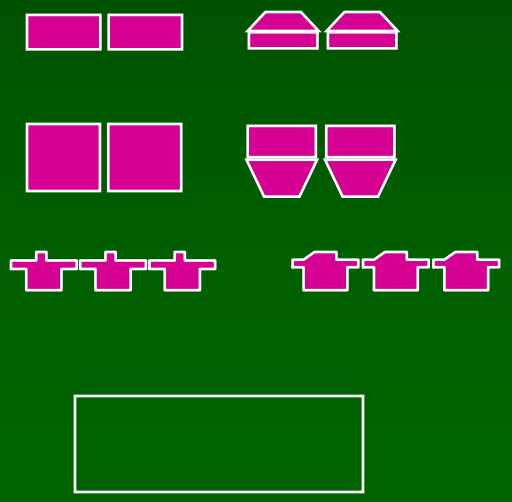

- Also, the fibers offer a resistance to passage, related to the consistency

Pressure screen

Pressure Screen Principle to Prevent Blinding of Screen

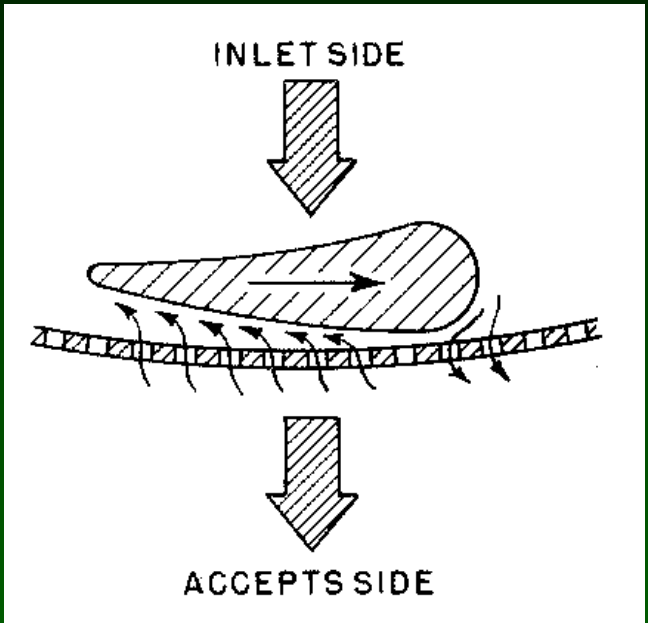

The leading edge of the rotating foil accelerates the stock.

The negative pulse under the sweeping foil momentarily reverses the flow, effectively purging the screen openings.

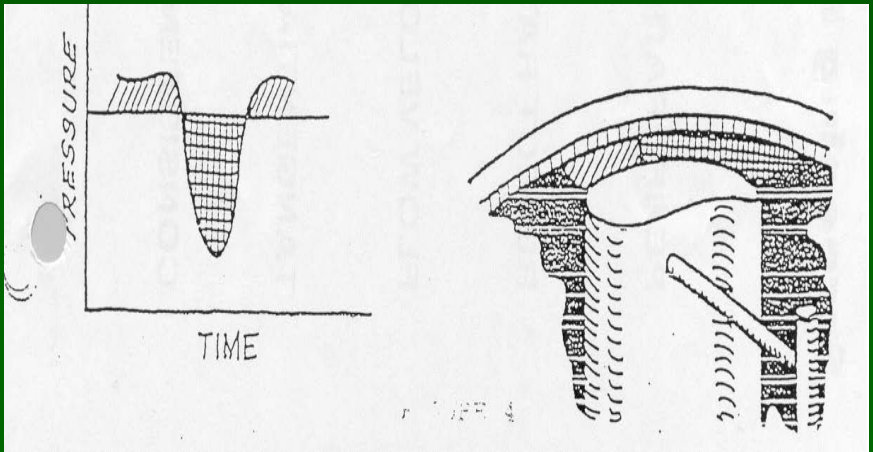

Effect of Reject Rate & Plate Opening on Screen Cleanliness

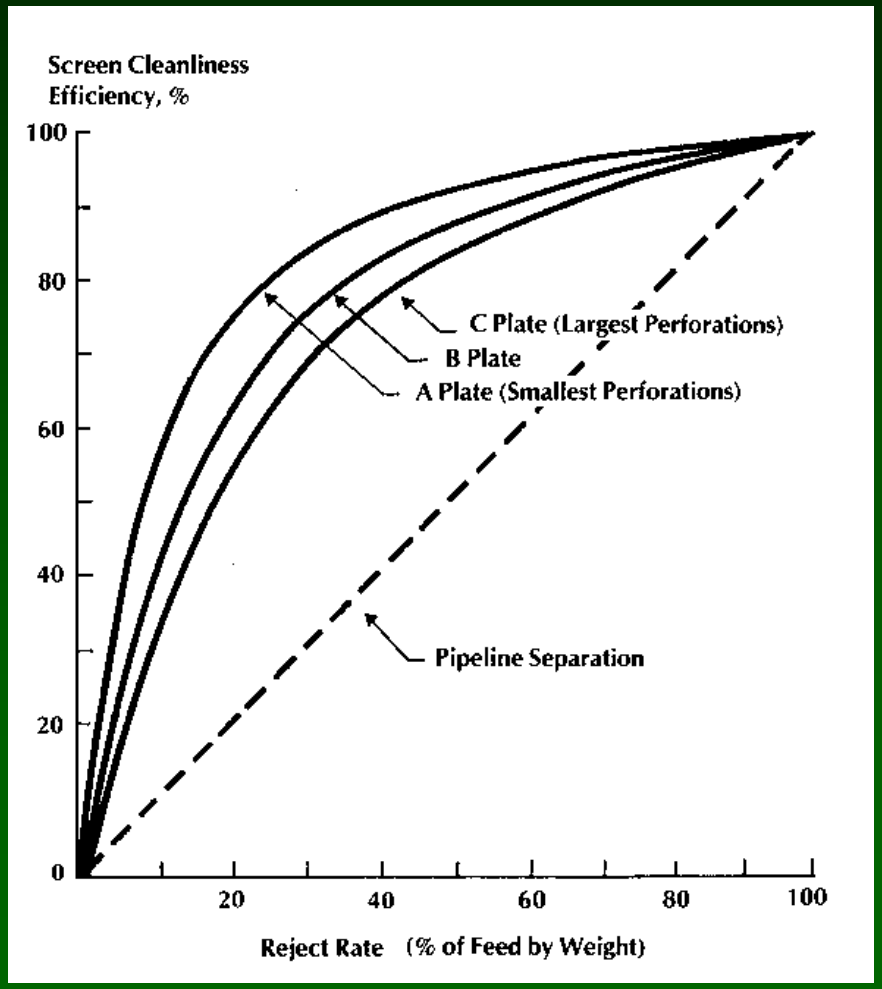

Screen Layout:

Always have cascaded screens to save fiber.

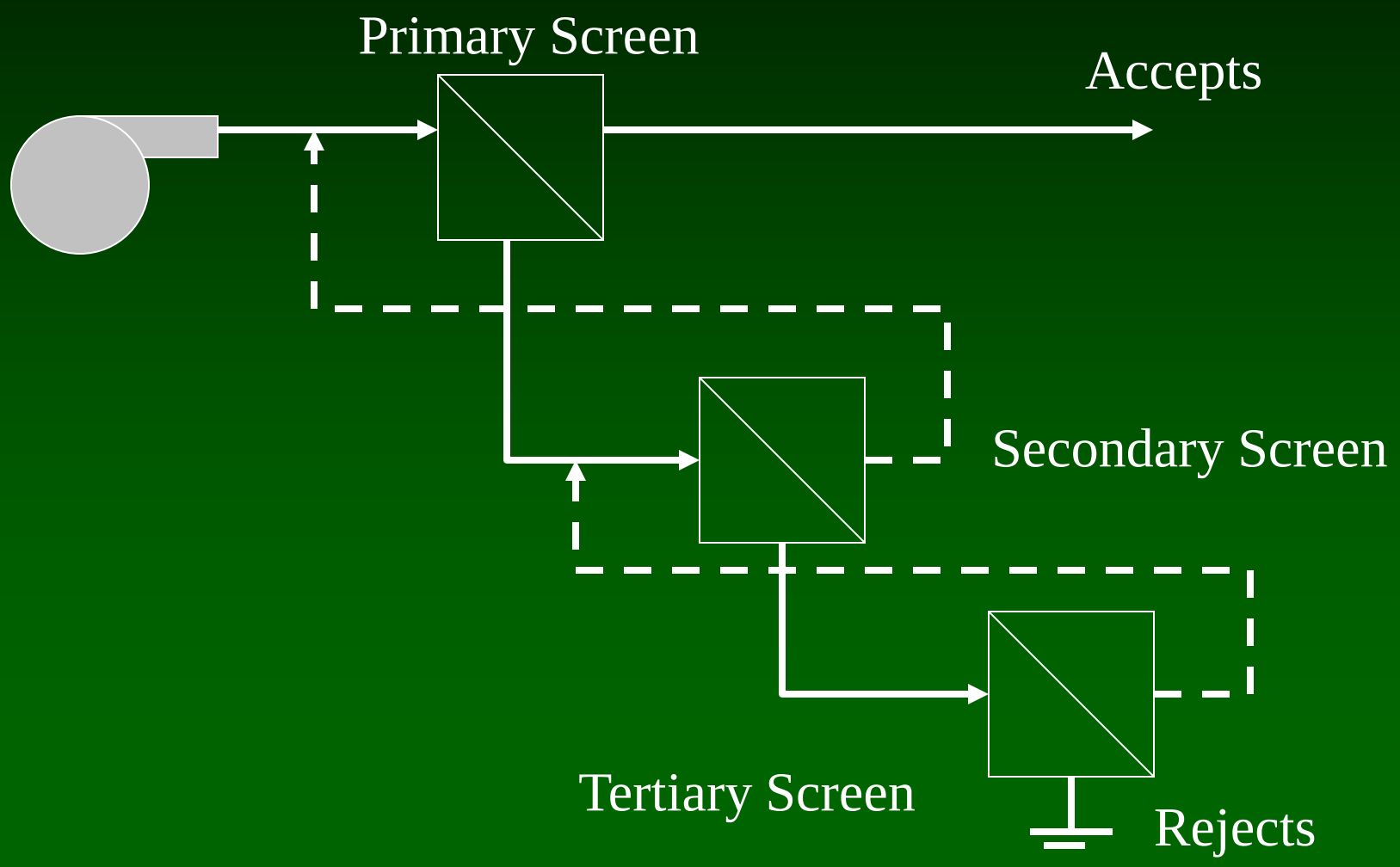

Screen Performance Variables

- Stock characteristics
  - fiber type, debris characteristics, debris level
- Screen design
  - flow configuration, plate cleaning mechanism, perforation type (holes or slots), rotor speed
- Operating variables
  - stock flow rate (pressure drop across screen), feed consistency, reject rate, screen plate perforation size, stock temperature, dilution flow to screen

Summary Pressure Screen:

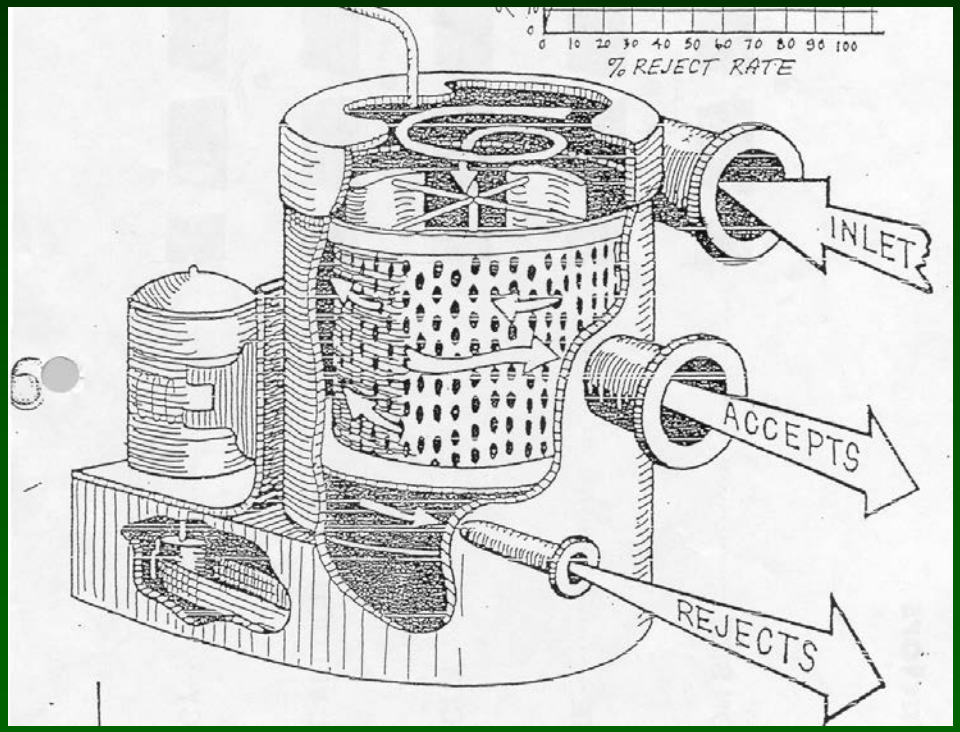

Objective: separate large contaminants from fibers

Utilize holes or slots to reject _____ contaminants

Typically _____ configurations to save fiber .

Foils used to _____.

Centrifugal Cleaning

- Remove impurities from the pulp stream based mainly on density
- Density = mass / volume
- Rotational fluid flow within the cone causes denser particles to move to the outside faster than lighter particles due to centrifugal forces
- Centrifugal cleaners remove
  - metals
  - inks
  - sand
  - bark
  - dirt
  - etc.,

Centrifugal Cleaner: Features and Flow

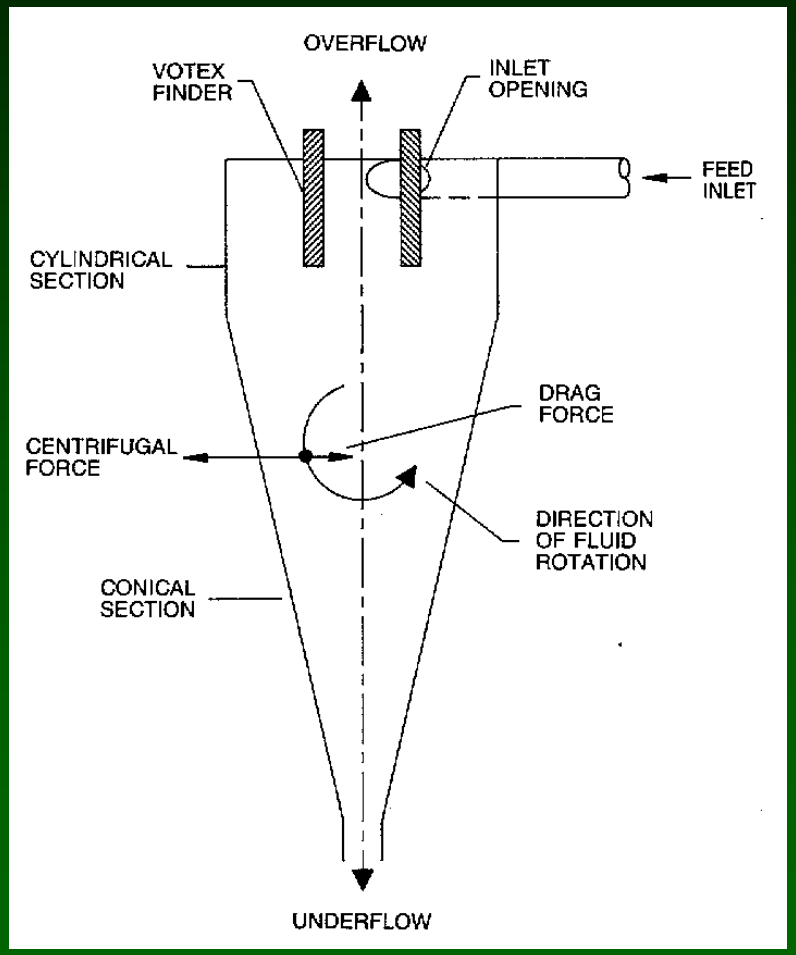

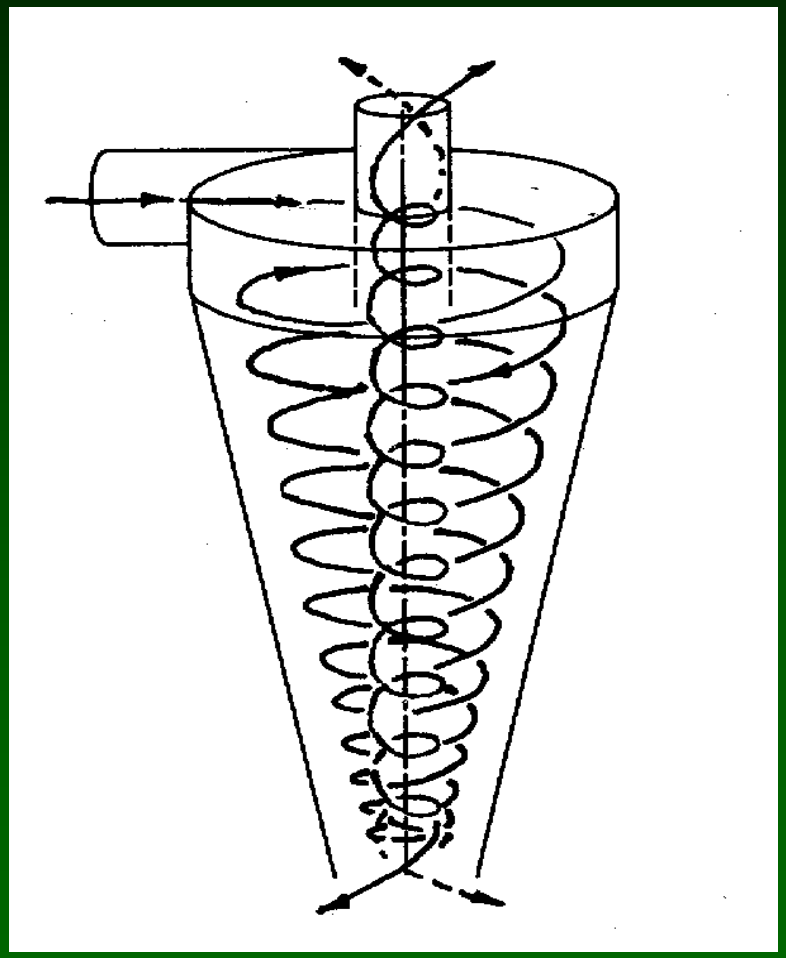

“Bank Arrangement” of Cleaners: stages

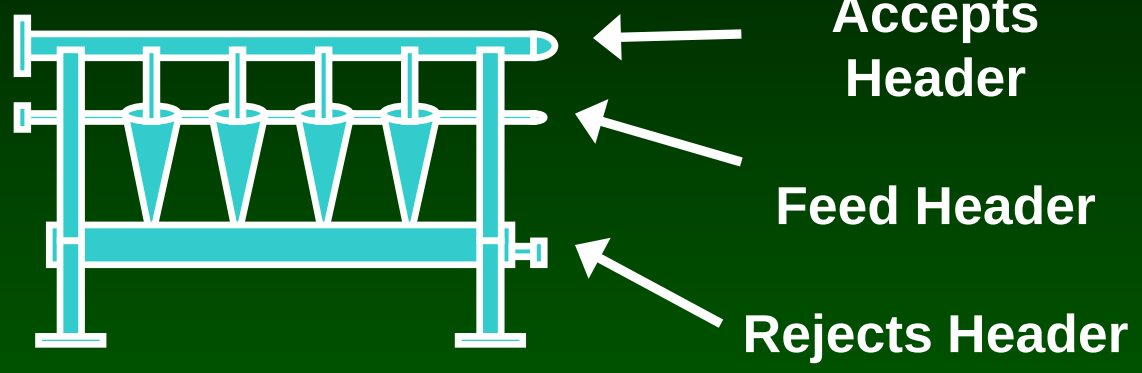

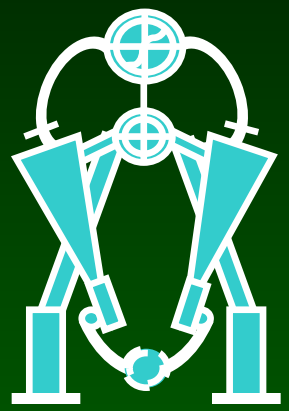

Several cleaners are piped in parallel fashion: a stage. A single cleaner is not capable of providing enough through put for typical industrial flows.

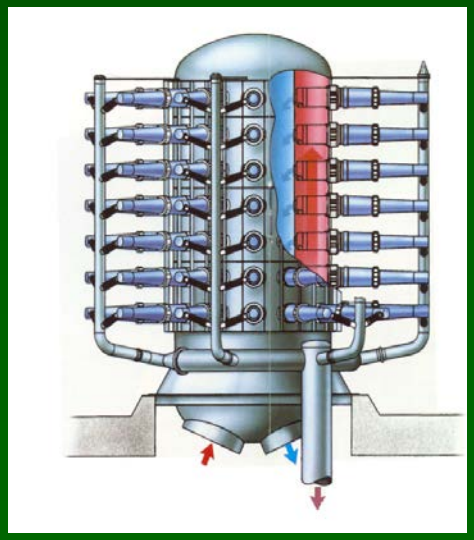

Cleaners Pump

Typical Separation "Curve"

Separation Ratio:

m(in) – m(acc) / m(in)

m= mass flow contaminant

Cleanliness Efficiency:

PPM(in) – PPM(acc) / PPM(in)

PPM= contaminant concentration

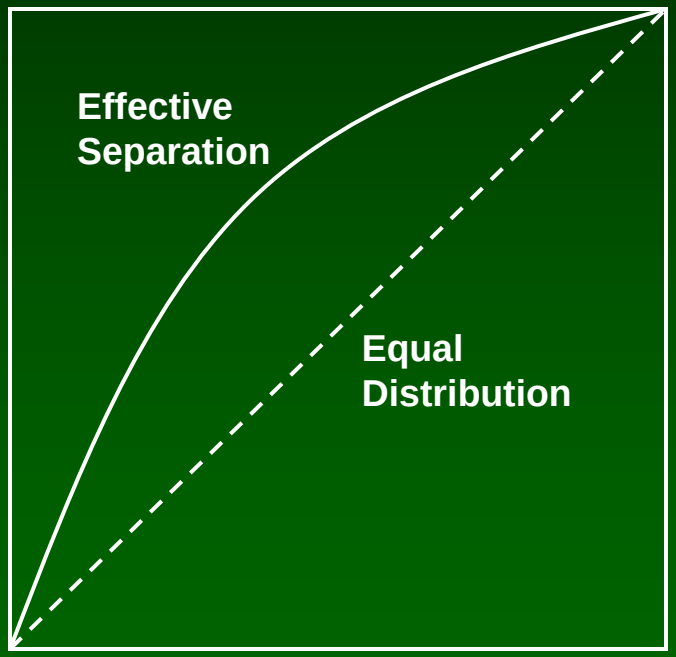

Reject Ratio: OD mass flow reject / OD mass flow inlet

Cascade Arrangement of Cleaners

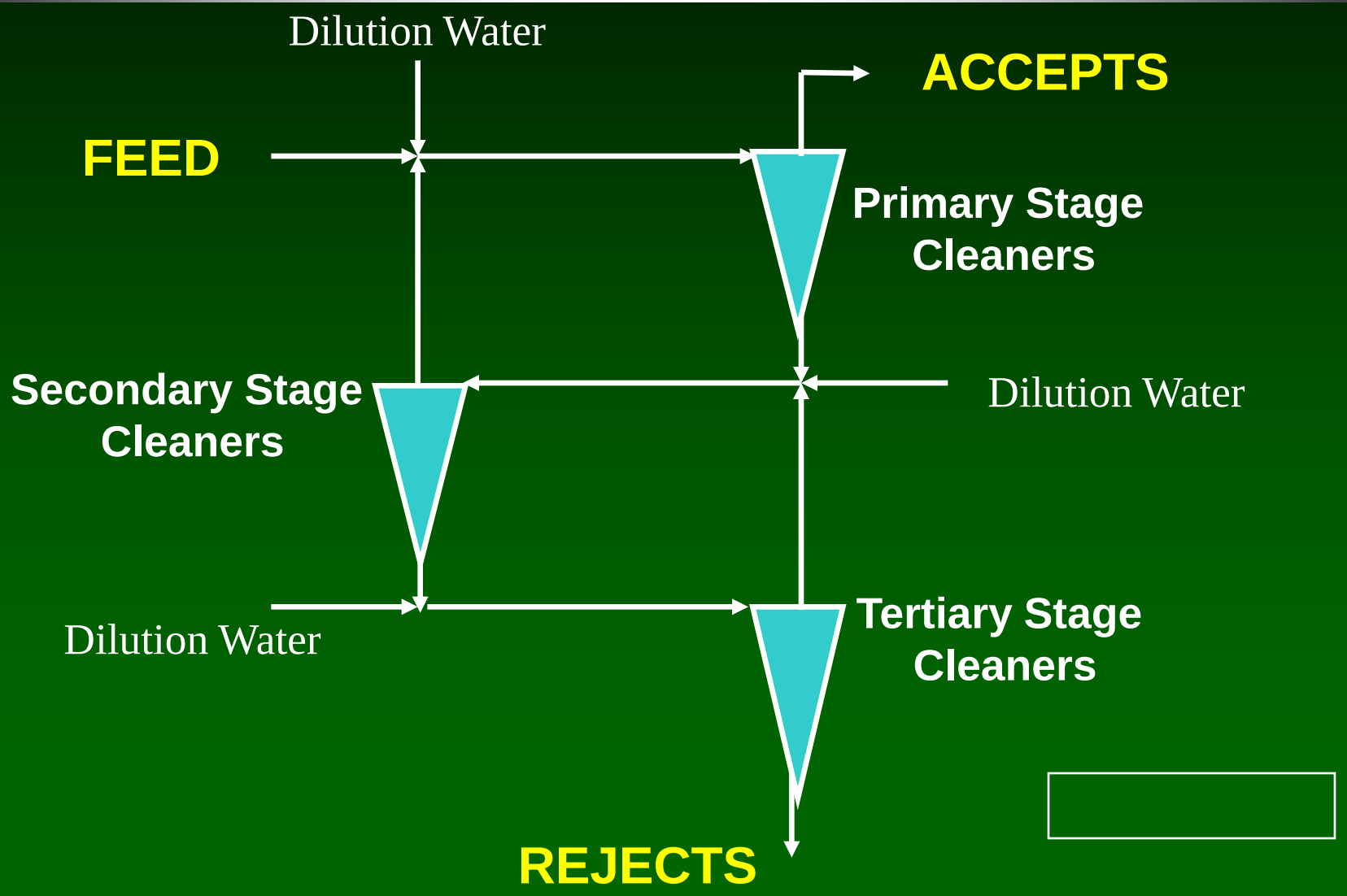

Three Basic Cleaner Types:

- **High Density Cleaner:** separates very **large, heavy** contaminants such as rocks, staples, glass. Used after pulping (early in the process) to protect downstream equipment. Diameter = 300-700 mm.

- **Forward Cleaners:** separates **fine, heavy** contaminants such as a sand and inks. Also called cyclones, hydrocyclones, or cleaners. (Described previously) Diameter = 70-400 mm

- **Through Flow Cleaner:** separates **fine, light** contaminants such as glues, adhesives, plastics, foam. Also called light-weight cleaners or reverse cleaners. Diameter = 100-400 mm

High Density Cleaner (immediately after pulper)

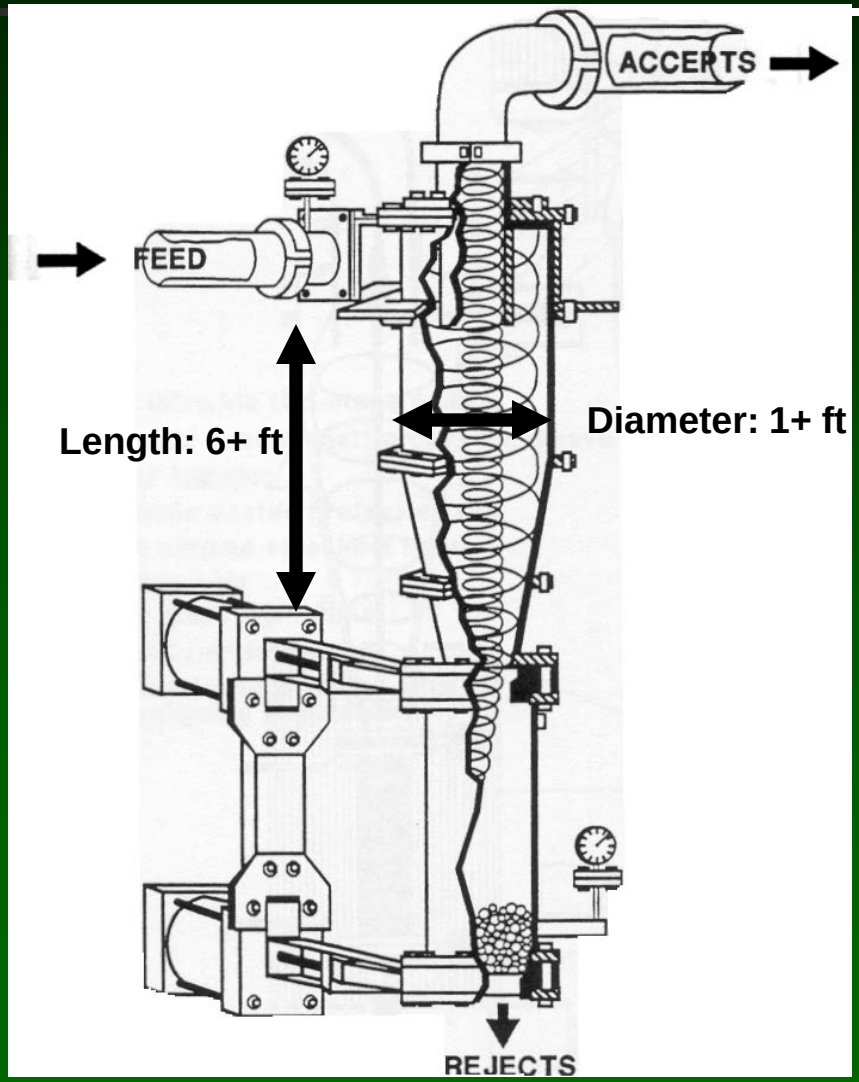

Through Flow Cleaner
(Removes Low Density Contaminants)

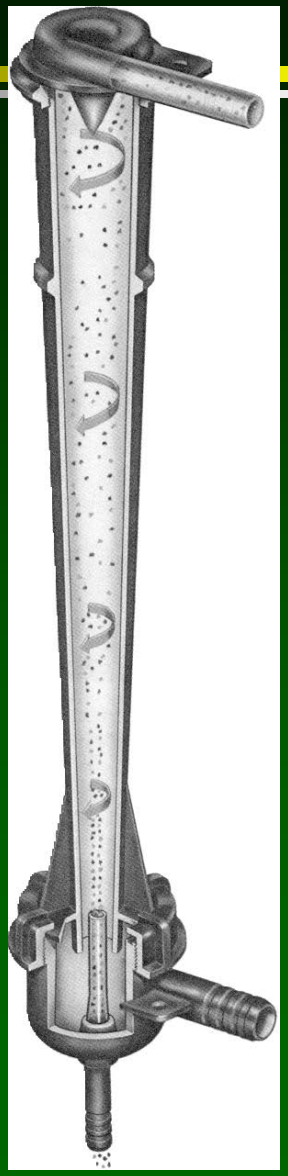

Feed

Rejects

Accepts

Cleaner Summary

- Cleaners: removes contaminants based on _____ differences relative to fibers
- Cleaners: Must reject about _____ % of the solid material to operate effectively (individual stage)
- Sets of cleaners piped in parallel are called a _____ of cleaners.

Washers

- Definition: a separation device that rinses small particulate contaminants away from fiber while minimizing fiber loss
- Wire mesh utilized (60-100 mesh or 250-150 micron openings
  - fine often defined as less than 200 microns,
  - fillers around 1-20 microns
  - Inks around 1-100 microns
- Deinking Washer
  - Dilute pulp with wash water
  - Disperse small contaminant in water phase
  - Remove contaminant laden water
  - Always a compromise between fiber/fine loss and ink removal

Gravity Decker

- Pulp enters at 0.8% and leaves at 5%
- Water (and ink) passes through wire mesh cylinder
- Vacuum created by liquid falling increases water removal

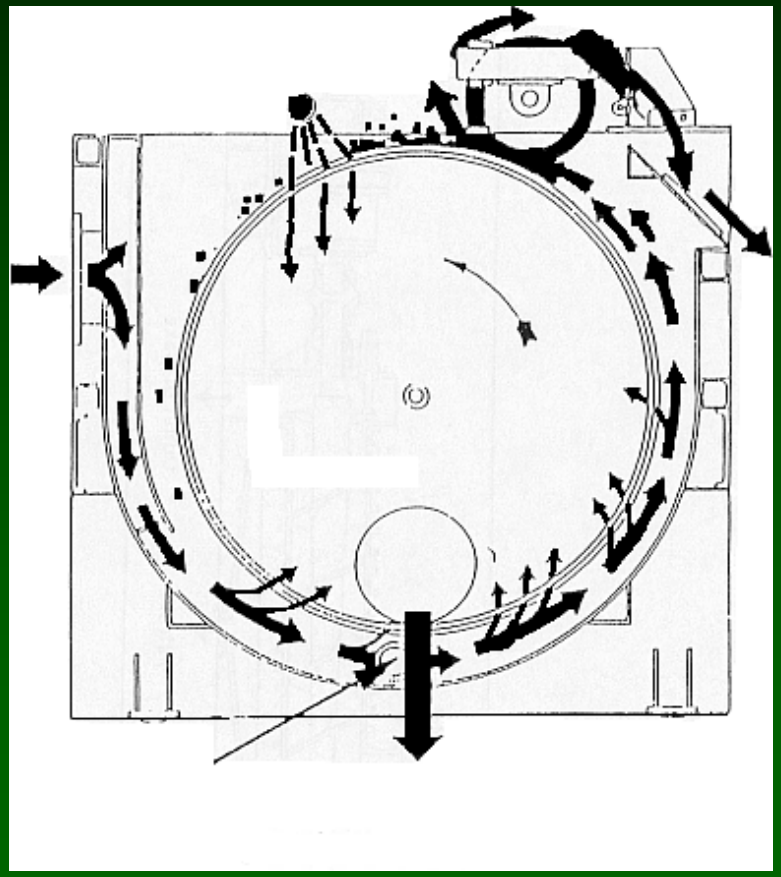

Gravity Decker

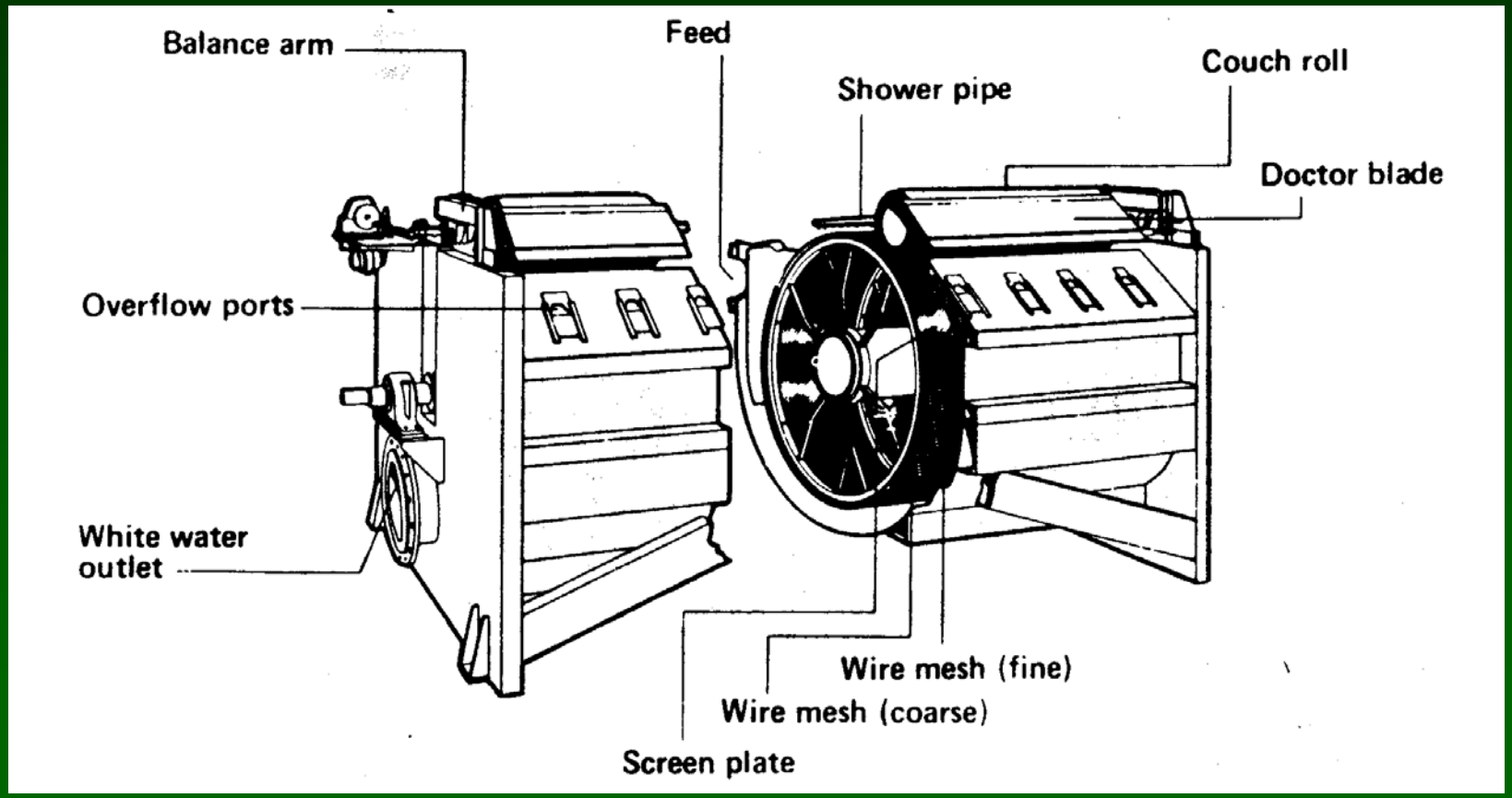

Double Nip Thickener (DNT)

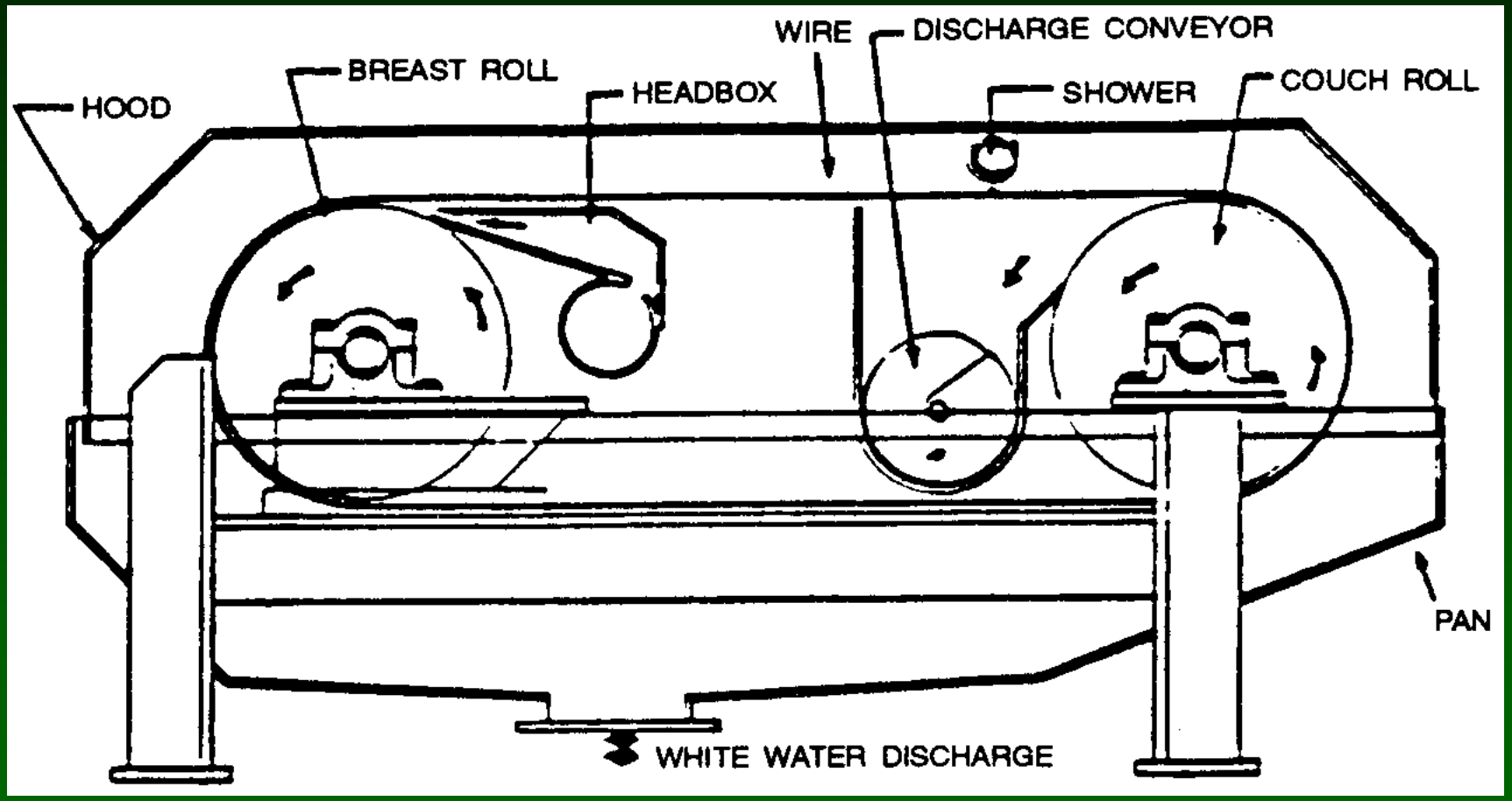

Double Nip Thickener

- DNT Washer
  - “double nip thickener”

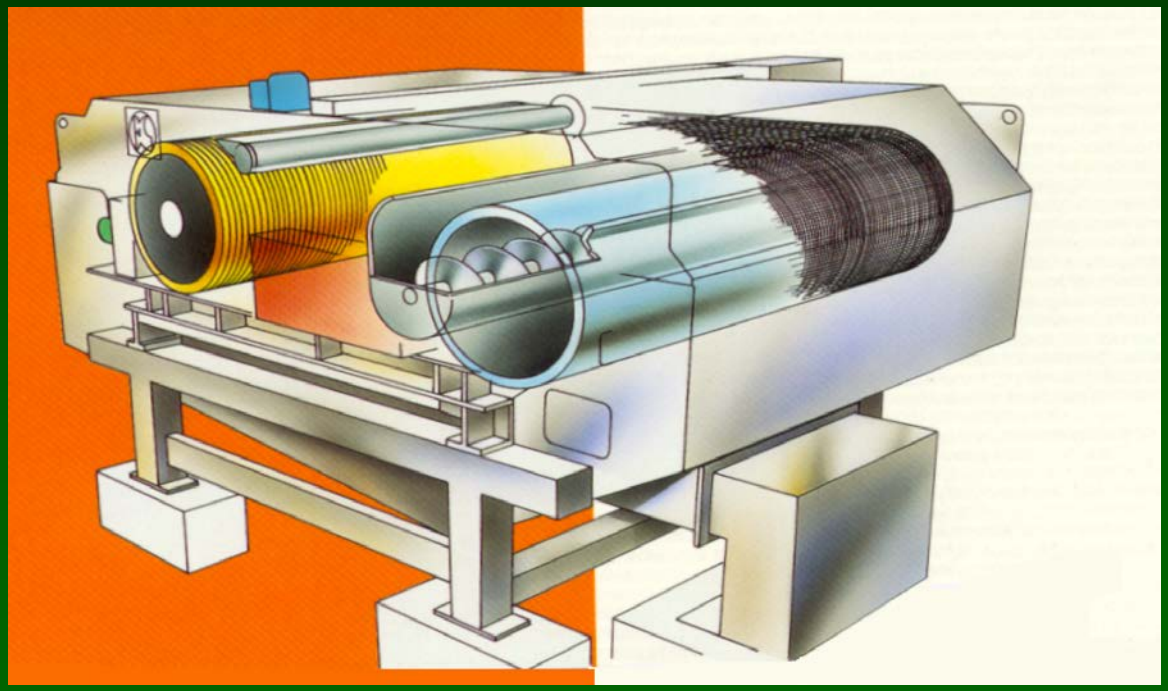

Pulp mats prevent the removal of small particles in washing!!!!!

Type	Inlet % K	Outlet % K	Ash Removal %, Theoretical	Ash Removal %, Actual	Pulp Mat Formation
Sidehill Scrn	0.8	3	74	60	Minimal
Grav Decker	0.8	5	85	55	Yes
Incl. Screw	3.0	10	72	45	Extensive
Horiz. Screw Press	4.0	28	89	35	Extensive
Belt Washer	1.0	10		80	Minimal
Vario Split	0.8	10	85	80	Minimal

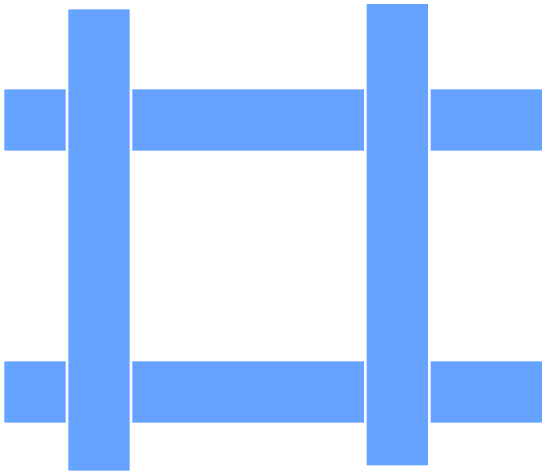

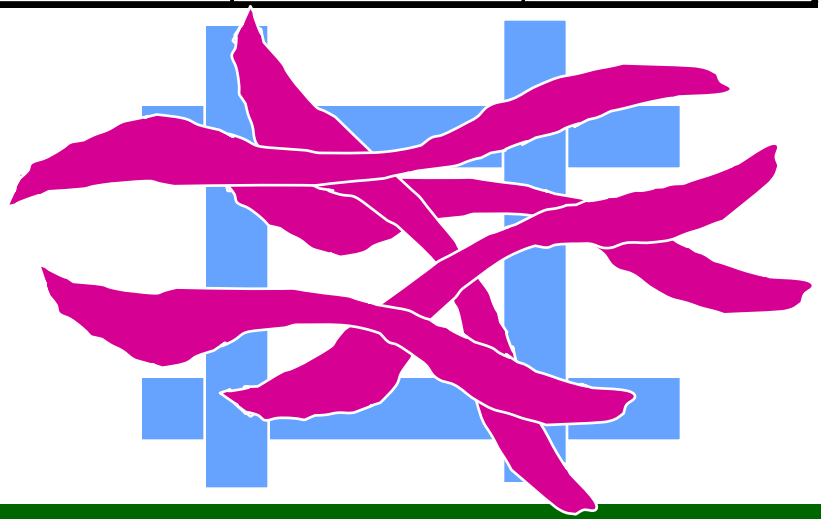

Flotation

- Definition: a process in which hydrophobic contaminants are preferentially removed from a pulp stock by attachment to air bubbles.

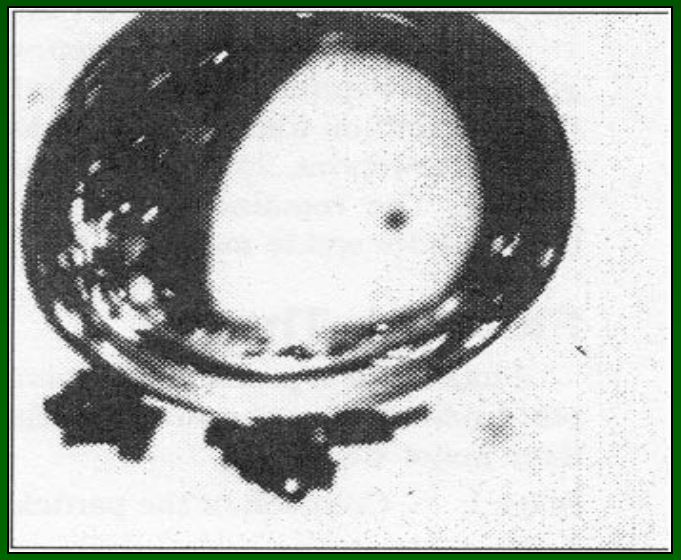

Ink particles attached to air bubble

Contaminant Characteristics: Hydrophobicity

- Hydrophobic - lacking affinity for water (inks, oils…
- Hydrophilic - having a strong affinity for water (cellulose fibers, starch, sugars….

A hydrophobic material (ink) suspended in water has a greater tendency to contact and adhere to air bubbles than a hydrophillic material (fiber).

Flotation

- For successful flotation of a contaminant (e.g., ink) several sub-processes must occur:
  1. The ink must be free from the fibers.
  2. Ink must collide with an air bubble.
  3. A strong attachment must form between the ink & the bubble.
  4. The ink-bubble must rise to the surface.
  5. The ink-bubble must be incorporated into the foam.
  6. The foam must be removed from the system.

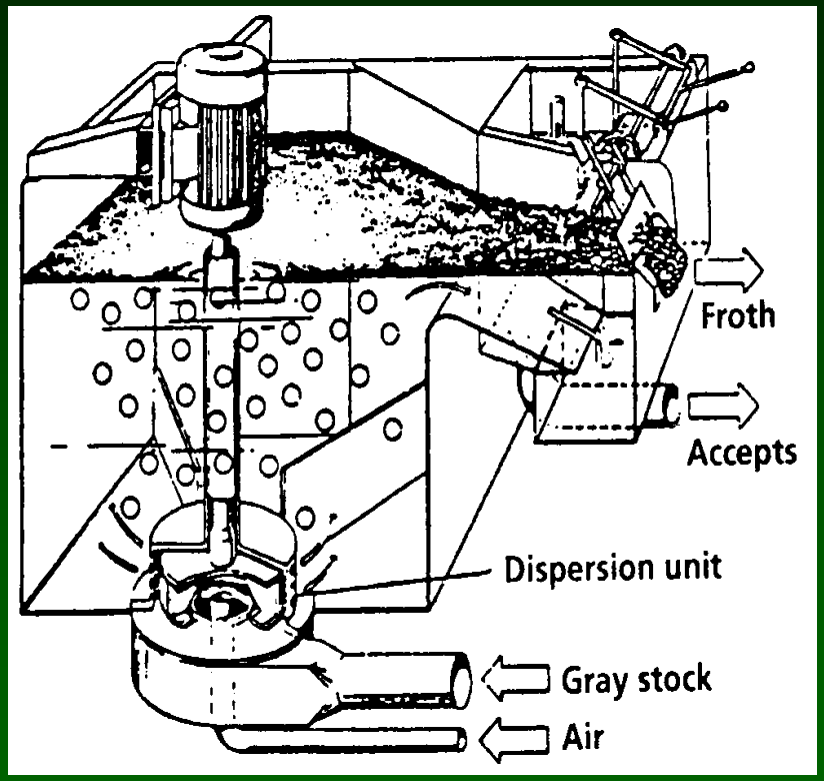

Flotation Cell

- Voith-Sulzer Flotation Machine, each pump in series, stock follows: feed->1->2->3>Accepts

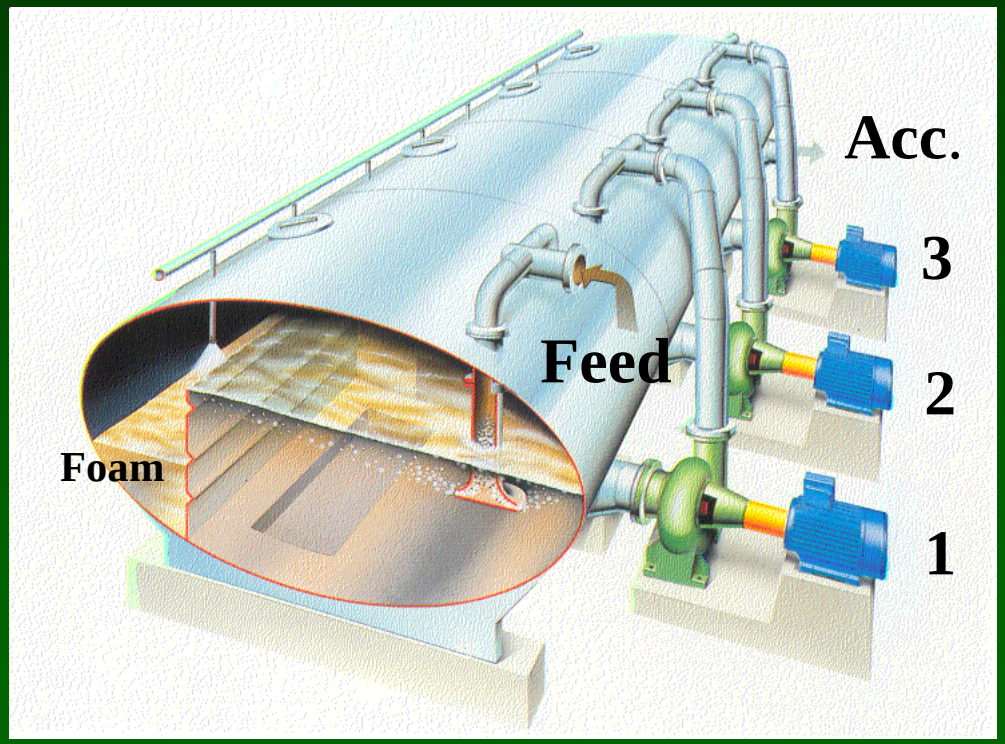

Washing vs. Flotation

	Flotation	Washing
Chemistry-Sensitive	more	less
Water Use	lower	higher
Yield	higher	lower
Ash Removal	No	Yes
Tensile Str.	Lower	Higher
Opacity	Higher	Lower

Flotation and Washing Summary

- Washing: removes contaminants based on _____ differences relative to fibers
- Flotation: removes contaminants based on _____ differences relative to fibers

- Pulp mat formation _____ the efficiency of de-inking washers
- Flotation / Washing retains more of the smaller particles (fillers) and has higher yield.

Dispersion and Kneading

- Definition: The use of mechanical action to decrease the particle size of contaminants and release the contaminants from the fiber surfaces (below, an example of pulp before and after dispersion).

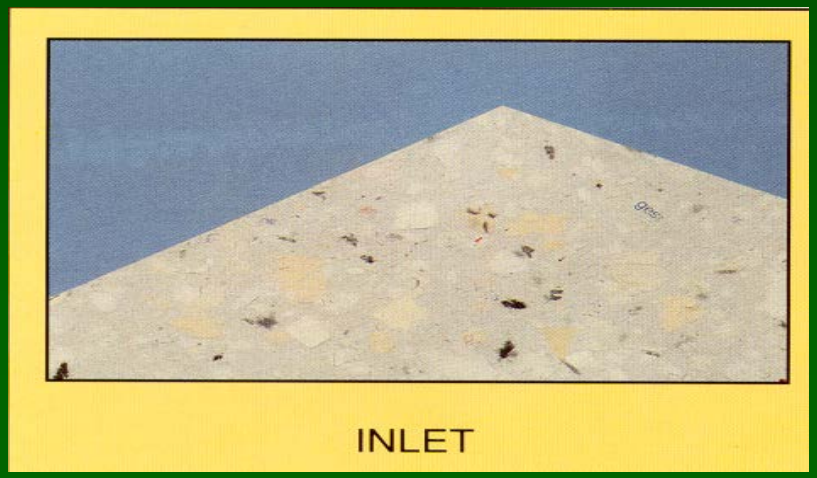

→

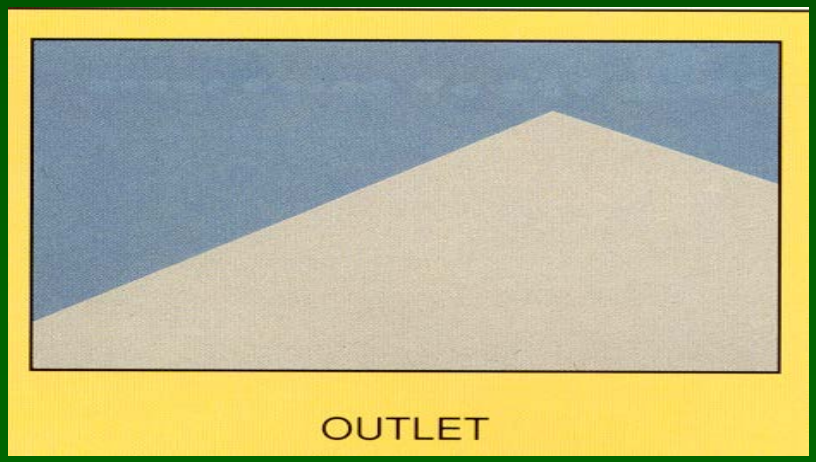

Dispersion

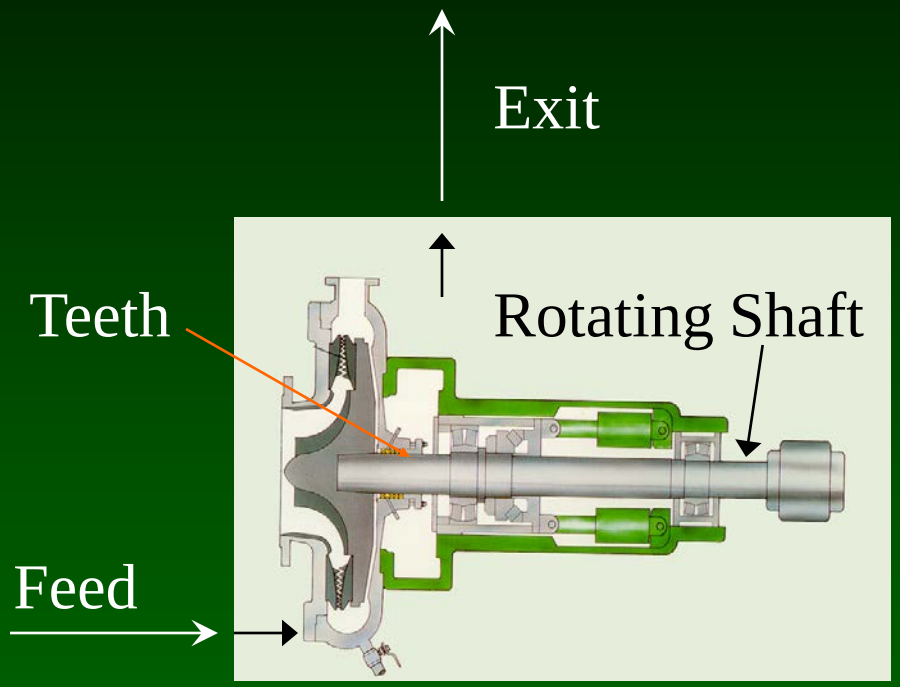

- How does it work?
  - Pulp at high consistency is passed between disks that have bars or teeth protruding from the surface.
  - Rotation of one of the disks causes intense shearing action on the fibers breaking down the contaminants.
- Typical Conditions
  - Consistency = 30% K
  - Temperature = 95 C
  - Retention Time = 2 seconds
  - RPM = 1200-1800
  - Gap between disks = 0.5-1.5 mm

Dispersion

- Dispersing System:
  - Process stock is dewatered to 30%K
  - Clods of stock are broken in the breaker screw
  - Steam introduced into a heating screw to increase temperature to 185-245 C
  - Stock fed to dispersing unit
  - Stock is diluted and agitated for further processing

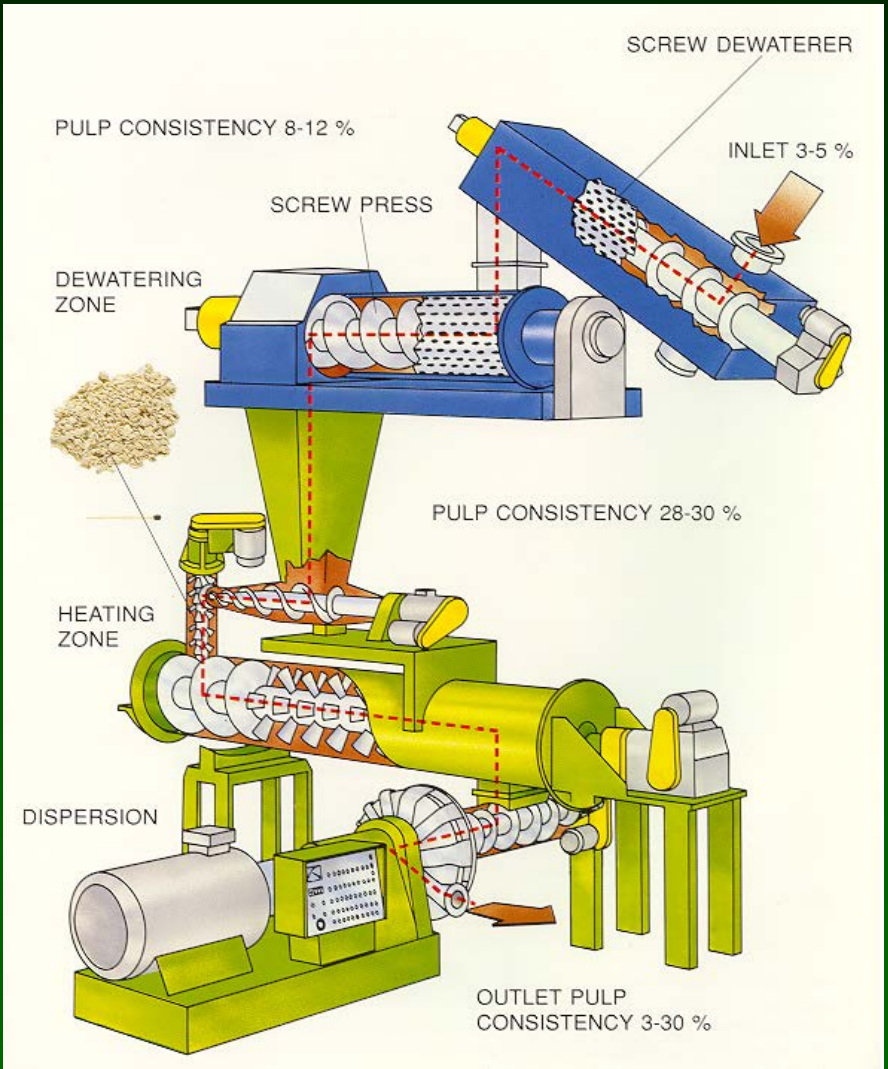

Kneading

- How does it work?
  - Pulp at high consistency is mixed between moving bars on a slow-rotating shaft and stationary bars attached to the housing.
  - Strong shear forces (mainly fiber-fiber rubbing) break the contaminants.

- Typical Conditions
  - Consistency = 30% K
  - Temperature = 50 C
  - Retention Time = 10-60 seconds
  - RPM = 100-900
  - Gap between bars = 10-40 mm

Single Shaft Kneader

- Process stock is dewatered to 30% K
- Stock enters a feed screw, steam or bleaching chemical may be added
- Stock is kneaded
- Stock is discharged, diluted and agitated for further processing

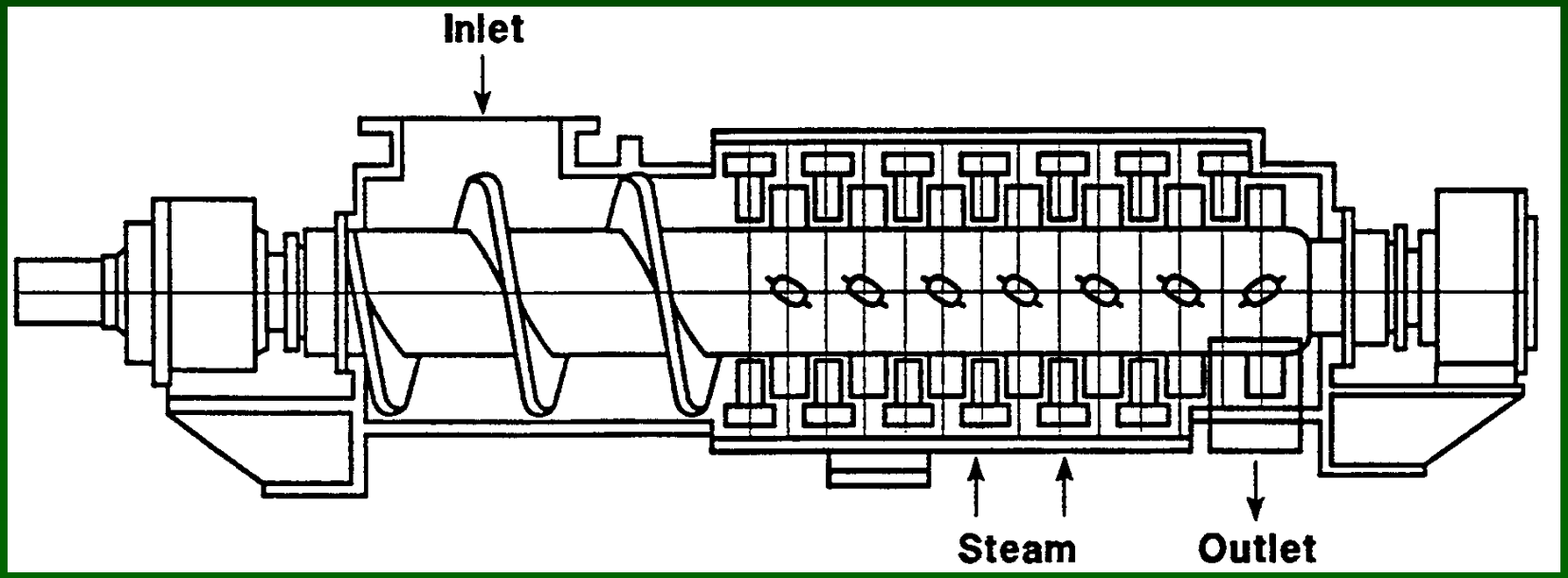

Double Shaft Kneader

- Operation principles the same as the single shaft kneader
- Contains two shafts rotating in different directions at slightly different speeds (20% difference in RPM)
- The different speeds and directions of the shafts generate intense shearing action.

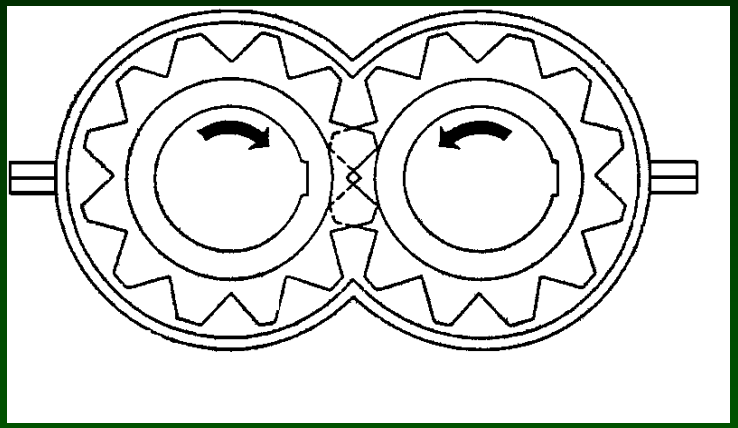

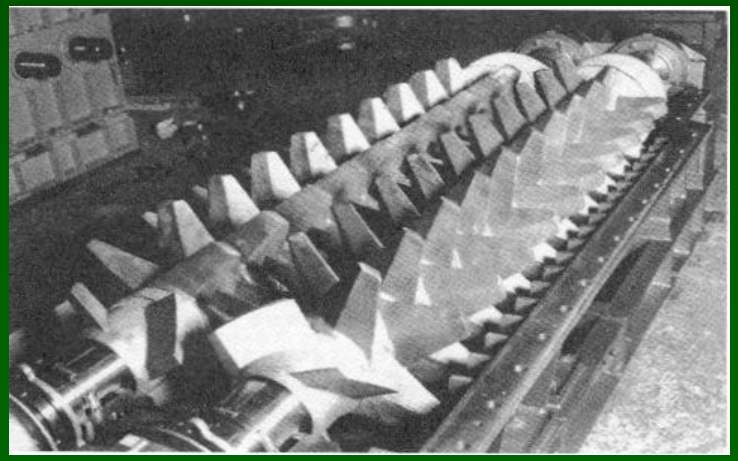

Kneading vs. Dispersion

Methods to decrease contaminant size.

	Dispersion	Kneading
Mechanism	Shear	Rub
Consistency	30%	30%
Temp.	95	50
RPM	1200-1800	100-900
Retent. Time	2 s	10-60 s
Gap, mm	.5-1.5	10-40

Kneading vs. Dispersion

Methods to decrease contaminant size.

Effect	Dispersion	Kneading
Tappi Dirt Reduct.	75%	85%
Toner Reduct.	yes	better
Stickies Reduct.	better	no effect
Fiber Cutting	substantial	none
Fines Generation	yes	no

Bleaching

- Bleaching is the chemical process applied to cellulosic materials to destroy chromophores, increasing the brightness and reducing color
  - Dye and Fluorescency Whitening Agents Destruction
  - Destruction of lignin from wood-containing fibers
  - Does not affect pigments
  - Oxidative and Reductive Bleaching Processes
  - Typically have 1 or 2 stages

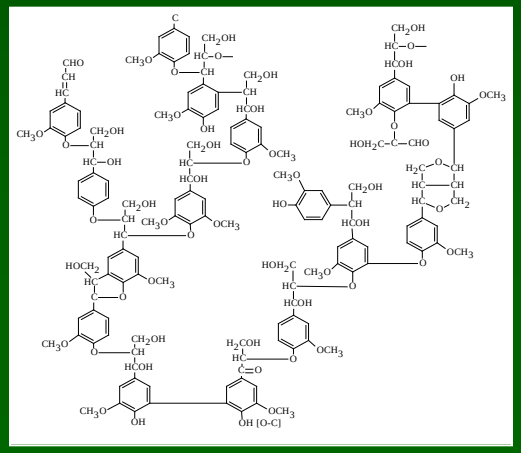

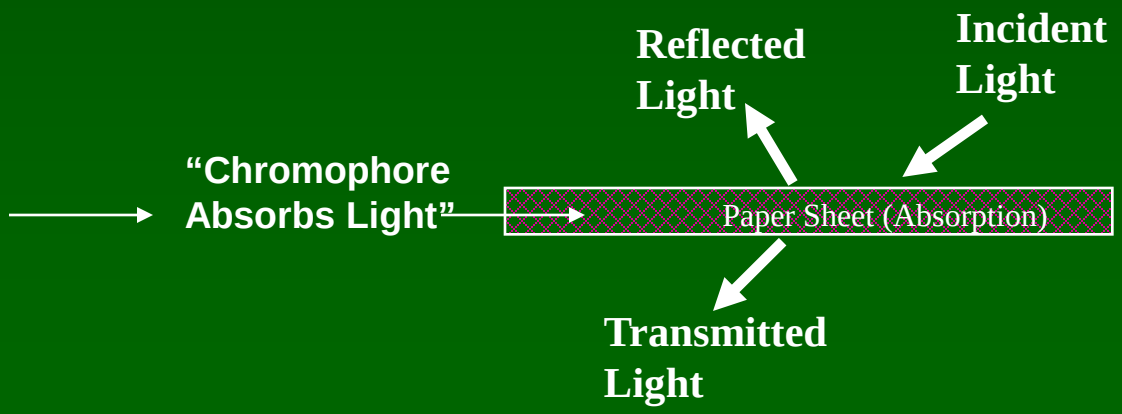

Bleaching

- Oxidative bleaching: peroxide, hypochlorite, chlorine dioxide, oxygen, ozone
- Reductive bleaching: hydrosulfite, fomamidine sulphinic acid (FAS)
- Issues:
  - chlorine free effluent
  - operations concerns
    - consistency
    - pH (avoid acidic state)
  - furnish/product characteristics
  - Can you bleach ink?
  - Can you bleach blue cotton fabrics?

Bleaching: Where is it done?

- Depends on the Bleaching Chemicals, desired product, and existing equipment. Common points are:
  - Pulper
  - Bleaching tower
  - Disperser or kneader system

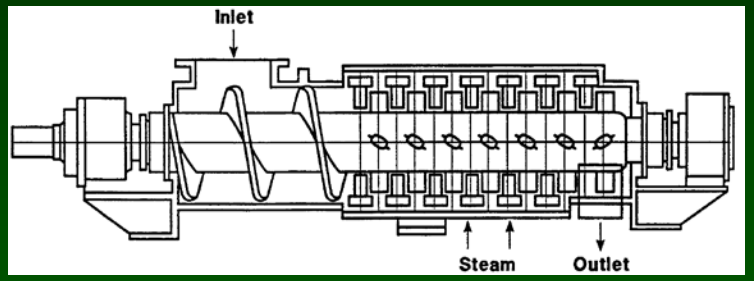

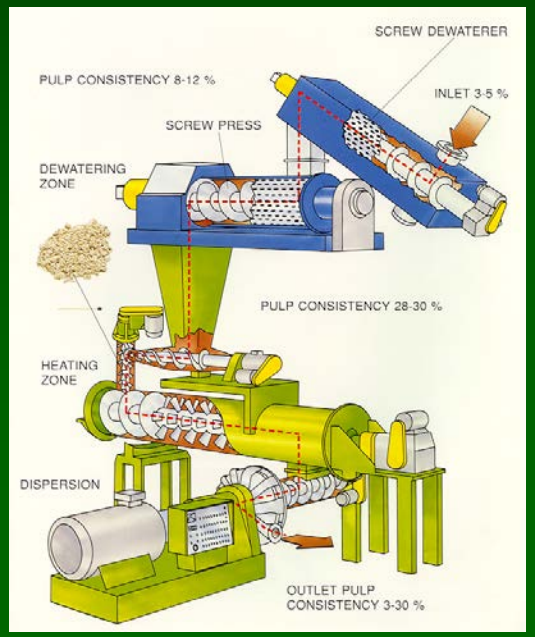

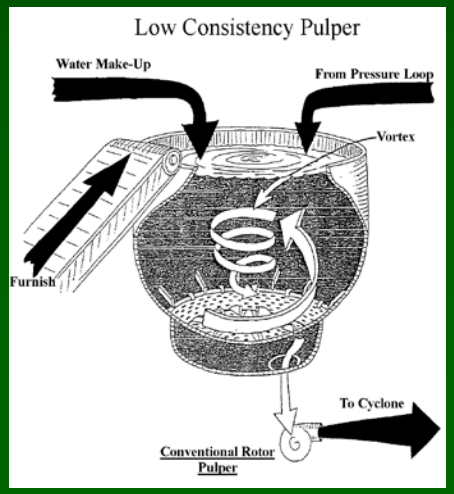

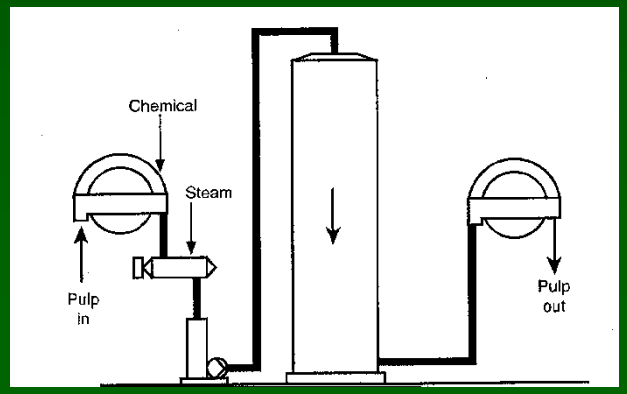

Paper Recycling Mill Waste

- The generation of acceptable recycled pulp is accompanied with significant waste streams

Stock Prep. Rejects	Sludges	Incineration Waste	Other Waste
Ragger Tails Drum Rejects Screening Rejects Cleaner Rejects	Deinking Sludges Clarifier Sludges Biological Sludges	Ashes Cinders (slags) Flue Ashes Gypsum ….	Chemicals Used Oils Cleaners Wires Felts Hazard. Waste ….

Amount of Rejects and Sludges for Production of Paper Grades, Virgin PM = _____

Produced paper	Recovered paper grade	Amount of total waste	Amount of waste [% by dry weight]			
			Rejects		Sludges	
		[% by dry weight]	Heavy-weight & coarse	Light-weight & fine	Flotation deinking	White water clarification
Graphic paper	News, magazines	15–20	1–2	3–5	8–13	2–5
	Superior grades	10–25	< 1	≤ 3	7–16	1–5
Hygienic paper	Files, office paper, ordinary, medium grades	28–40	1–2	3–5	8–13	15–25
Market DIP	Office paper	32–40	< 1	4–5	12–15	15–25
Liner, fluting	Sorted mixed recov. paper, supermarket waste	4–9	1–2	3–6	–	0–(1)
Board	Sorted mixed recov. paper, supermarket waste	4–9	1–2	3–6	–	0–(1)

Treatment of Wastewaters

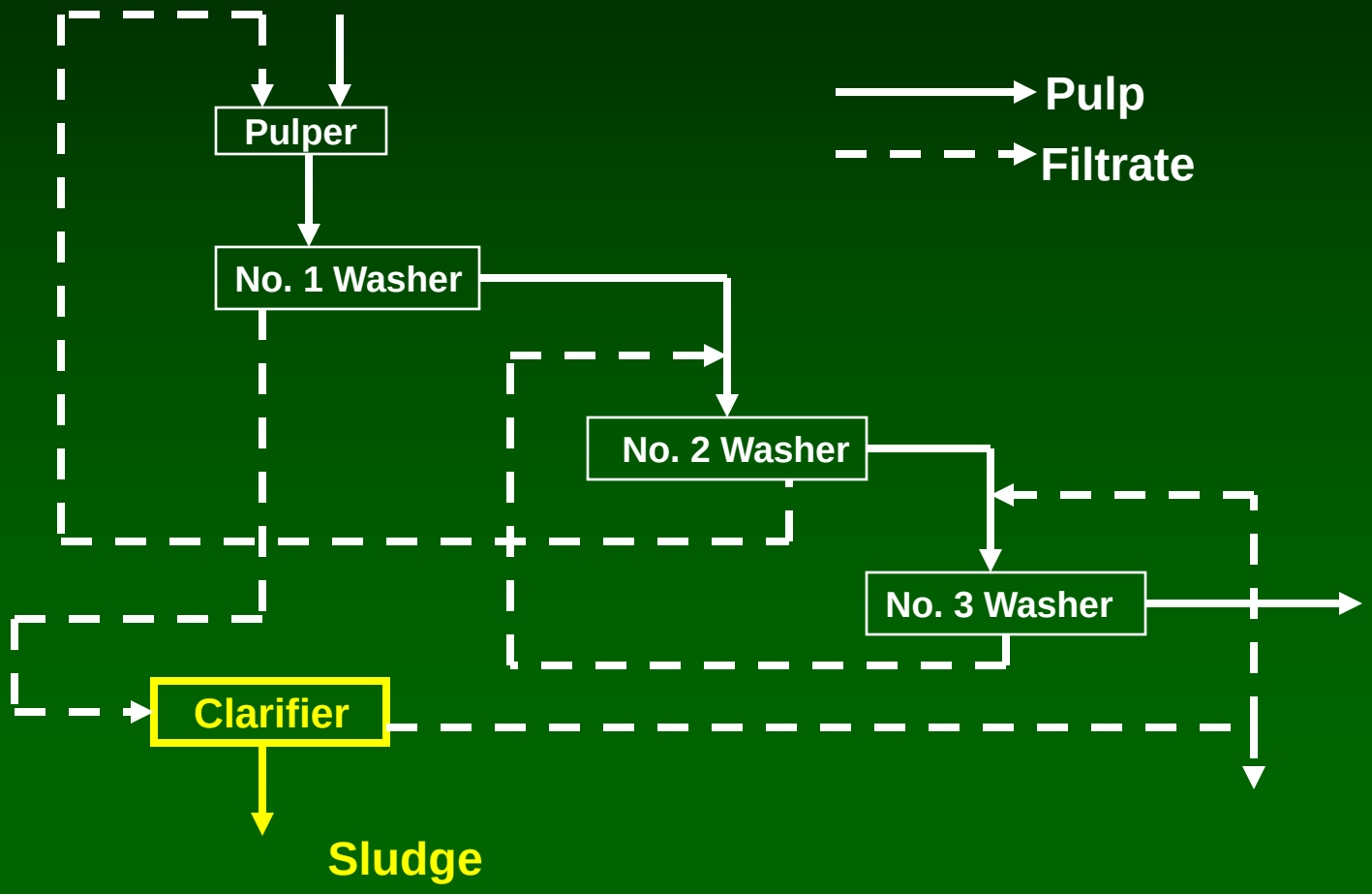

Water Treatment

- Re-use filtrates (often from thickening or washing process) to conserve water
- Clarifier objective: take filtrate and make a sludge and a filtrate
- Filtrate to Clarifier: 2000 ppm suspended solids
- Clarified water: 100 ppm suspended solids
- Sludge: 3-7% solids
- No change in colloidal or dissolved species

Dissolved Air Flotation (DAF) Clarifier

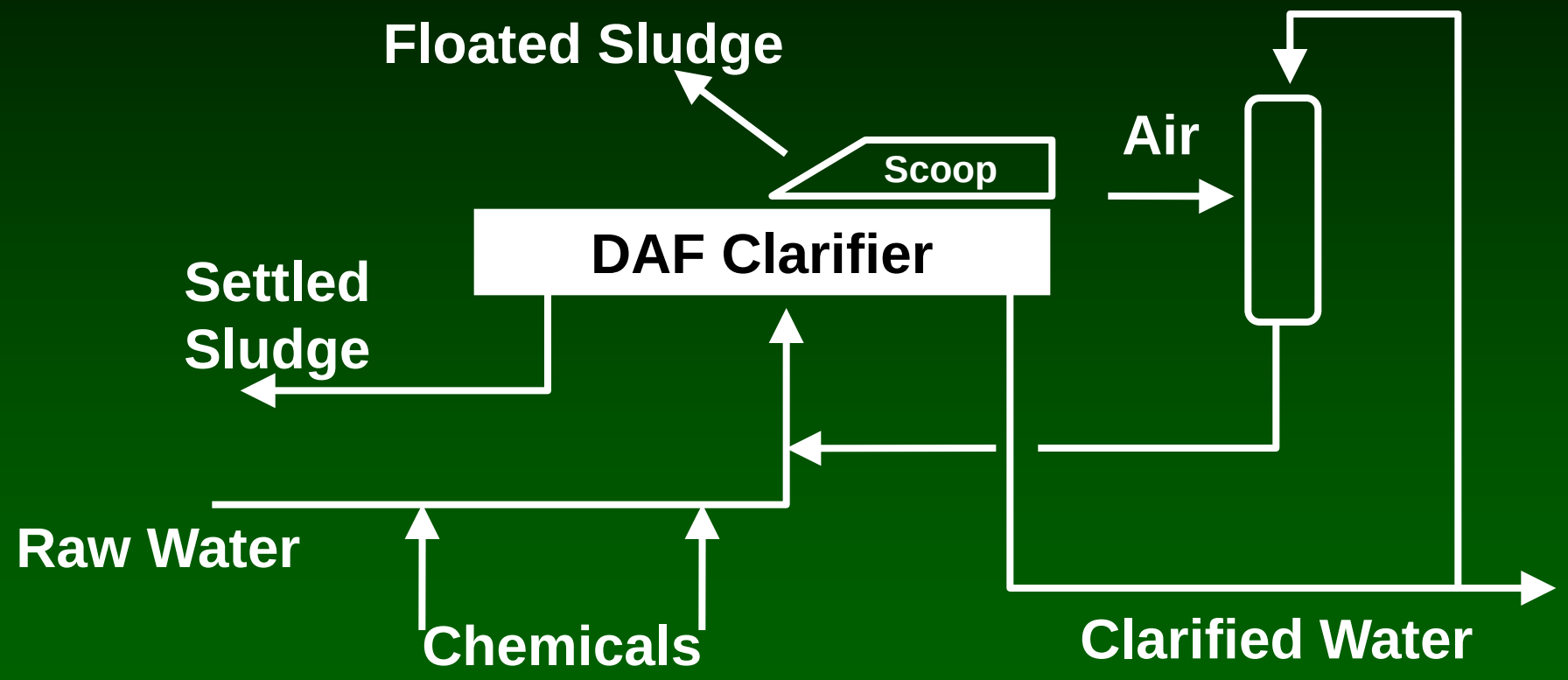

Most common clarifier for recycling
Raw water treated with chemicals to form flocs of suspended solids
Tiny air bubbles mixed with the water and attach to flocs
Flocs rise to surface and are scooped out
Some flocs settle to the bottom and are removed

Sludge Processing

- composition: fiber, fines, ash, contaminants, water
- dewatering equipment
  - presses
  - filters
  - centrifuges
- disposition
  - landfill
  - incineration
  - composting
  - other

Paper Recycling Operations: Review Quiz

Forward cleaner	removes light weight contaminants
pulper	removes hydrophobic contaminants
screens	removes small contaminants
disperser	separates paper/board into fibers
thru flow cleaner	removes large contaminants
washer	removes based on density
clarifier	allows re-use of process water
Bleaching	uses disks to break contaminants
Kneader	gentle rubbing to break contaminants
Flotation	chemical destruction of chromophores

Learning objectives

- To be able to describe:
  - the trends of paper recycling
  - Common contaminants
  - the purpose and operation of common unit operations in a paper recycling mill
  - ***the major types of paper recycling mills***

Paper Recycling Operations: A Balancing Act

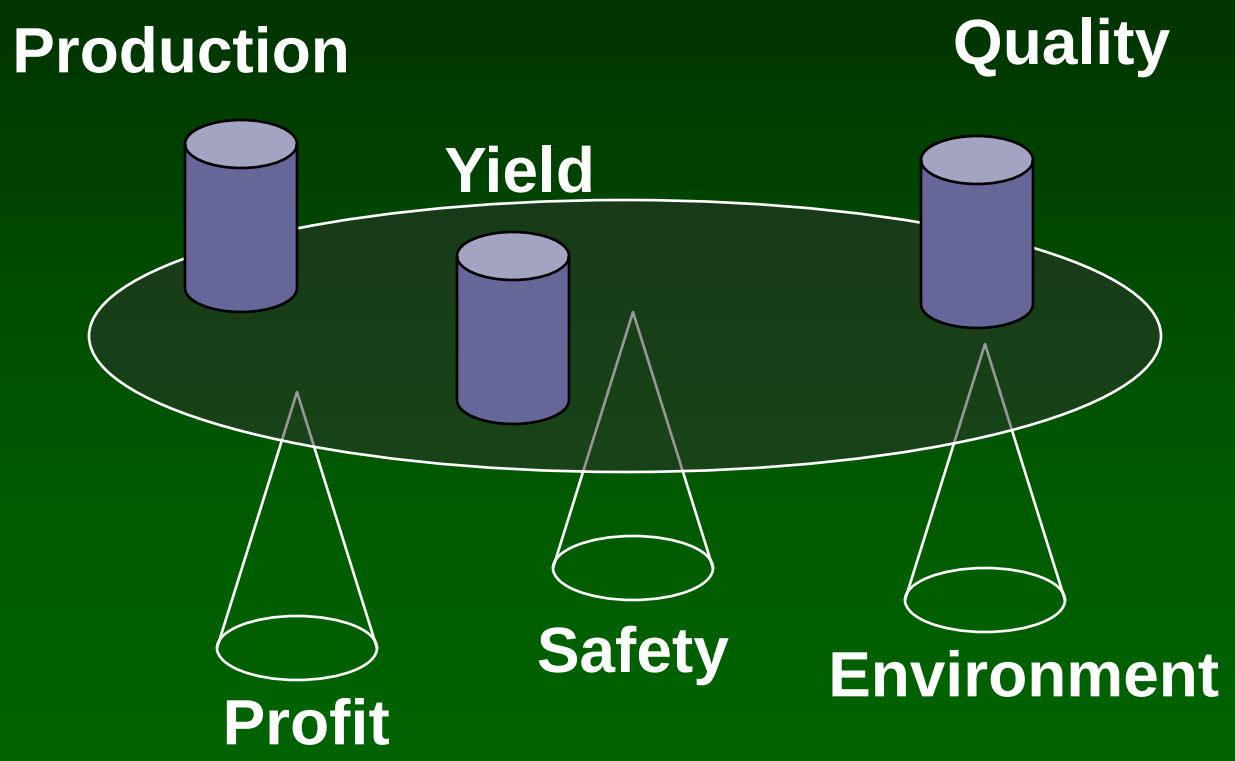

Major Recycling Systems

- Can be categorized by the products they produce
  - Packaging Materials
    - Typically, OCC materials are recycled back into linerboard, medium, tube stock, and solid board products
  - Newsprint
    - Old newspapers and magazines are converted into newsprint
  - Tissue
    - Bleached printing and writing wastes are converted into tissue
  - Printing and Writing Materials
    - Bleached printing and writing wastes are converted into pulp for application in new printing and writing grades

Crude Cleaning System for Packaging Product

- Used to produce liner, medium, folding board, tube stock
- Often used with a continuous pulper
- Yield?
- Contaminant removal?
- Ink removal?

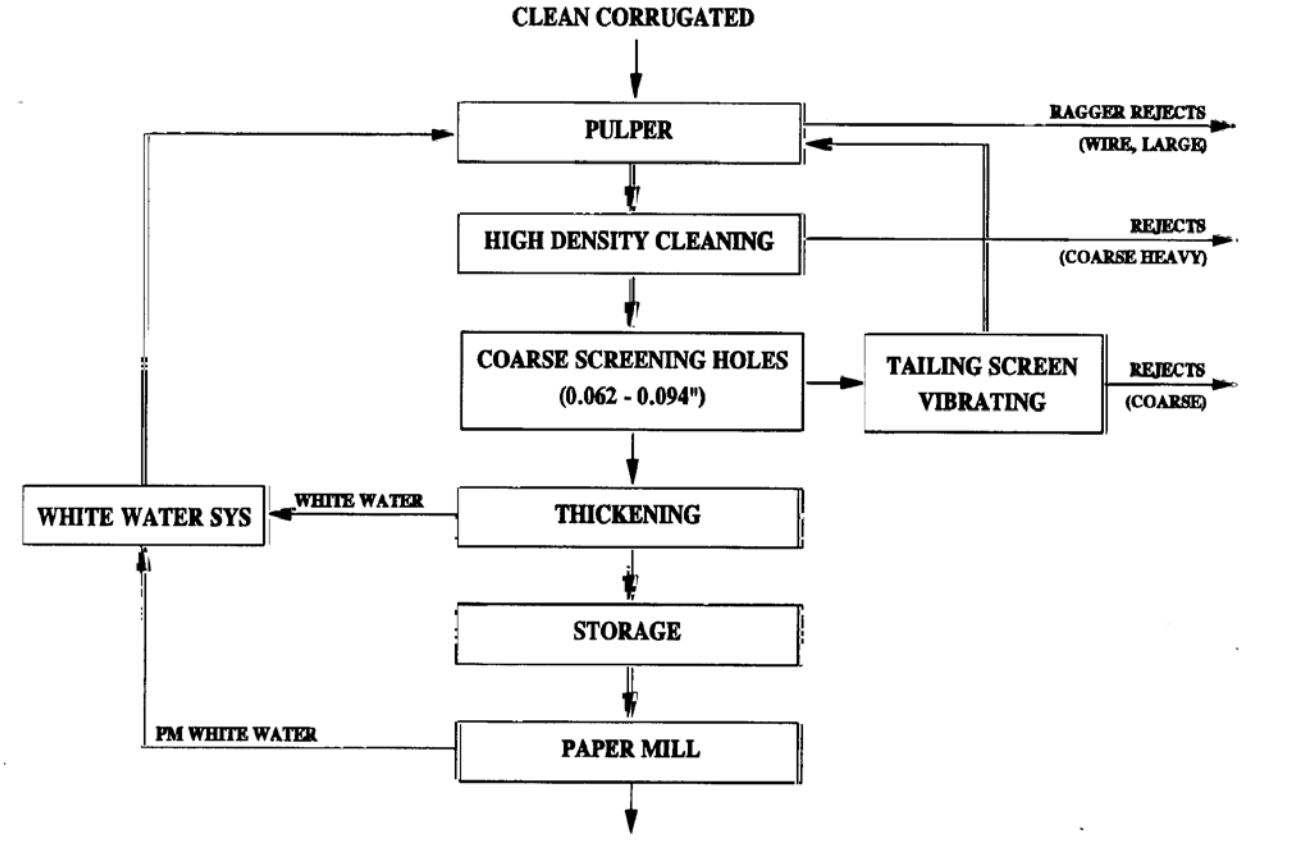

OCC Recycling for Higher Grades

- Used to produce linerboard or medium
- Often have a continuous pulper with cleaning system
- Note the strategy:
  - 1st remove coarse contaminants
  - 2nd remove smaller contaminants
  - 3rd disperse unremoved contaminants
- Use alkali to swell fibers and regenerate strength
- Problems with stickies necessitate extra cleaning steps
- Fractionation to provide cleaner top liner
- Extensive water recycling

Test Liner Production

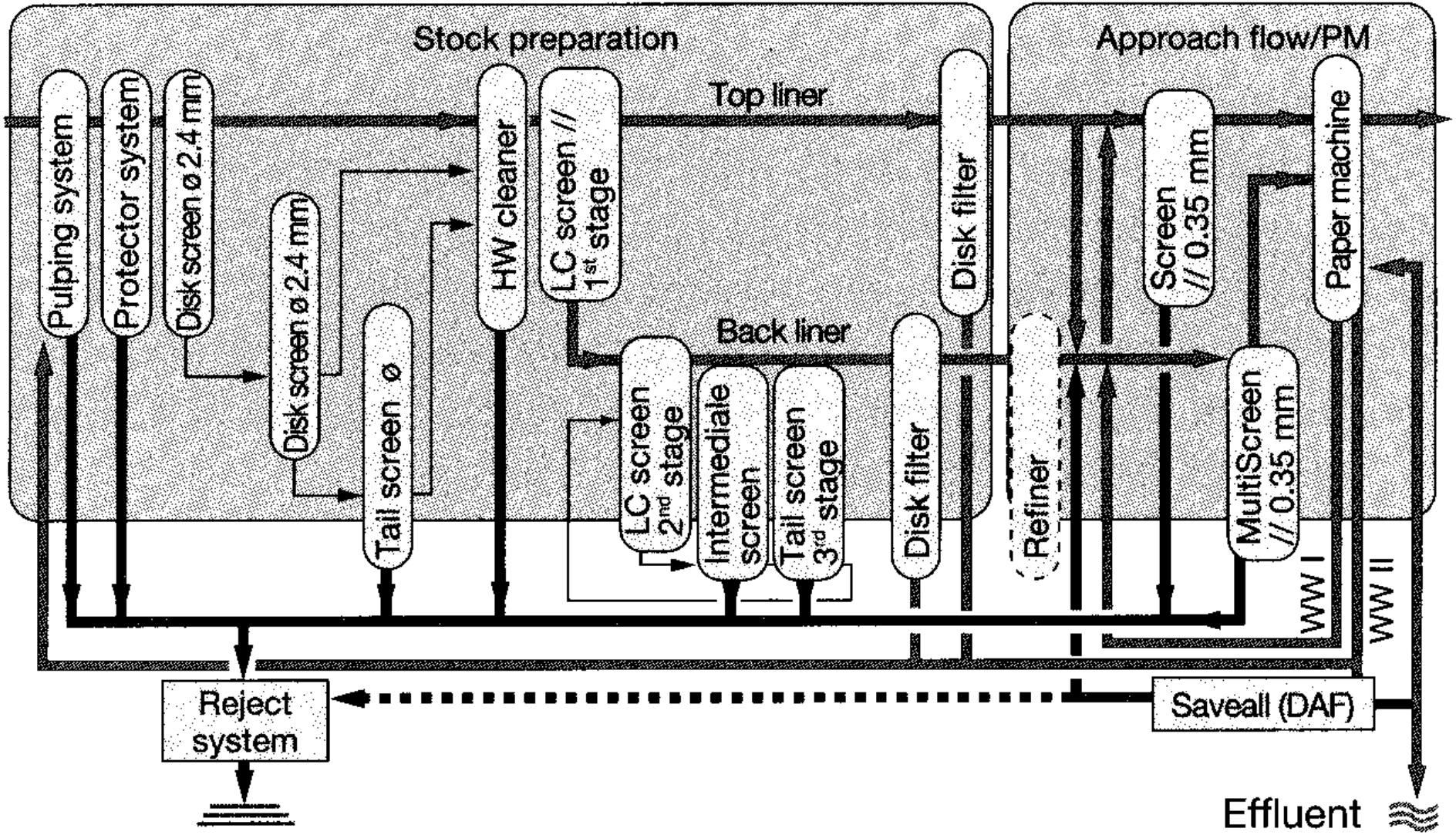

ONP-OMG Recycling

- Used to produce recycled newsprint
- May have batch, continuos tub or drum pulping
- Note the strategy:
  - 1st remove coarse contaminants
  - 2nd remove smaller contaminants, deinking
  - 3rd disperse unremoved contaminants
- Often bleaching is used to increase brightness
- Problems with stickies may be caused by OMG
- Extensive water recycling
  - Two water loops: pseudo countercurrent water-pulp flows

Newsprint Recycle Process: Rejects, Sludge Water Systems

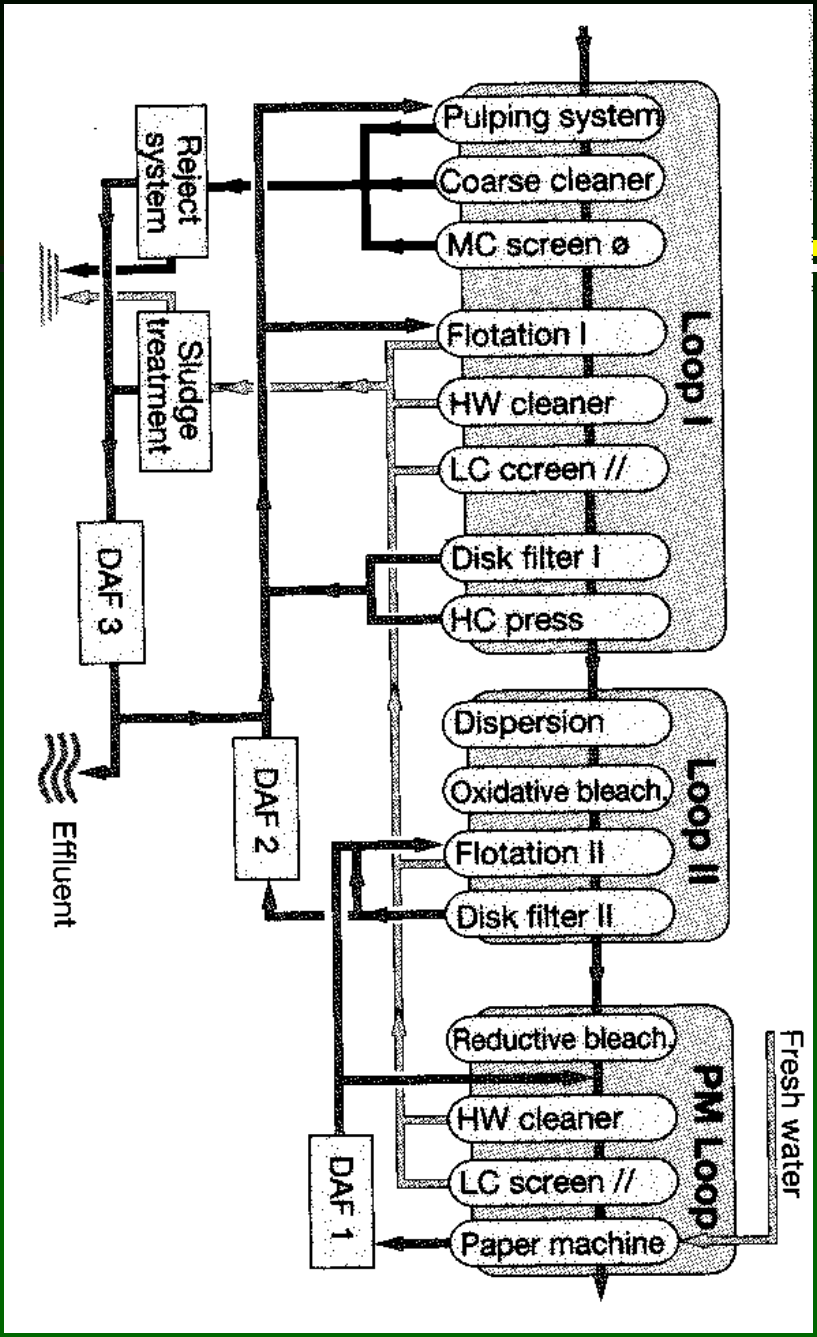

Pulping. Low or high consistency? Why?

Coarse Screen. What contaminants are removed?

Flotation? What consistency?

Cleaners and LC Screen. What consistency?

Why filter and press here?

Why dispersion so late in process?

Why bleaching so late in process?

Why flotation again, here?

Why 3 DAF's, not just one?

Deinking of Printing-Writing Grades for Tissue

- Use sorted or non-sorted office waste to make tissue
- For tissue making, filler level must be low for creping (see 1-2 stages of washing)
- Depending on quality of tissue, brightness and dirt count also important
- Lower grade tissue pulp production omits 1 stage of cleaners, bleaching and washing. May also omit flotation.
- Extensive water recycling
  - Two water loops: pseudo countercurrent water-pulp flows

High Grade Tissue: Wood Free

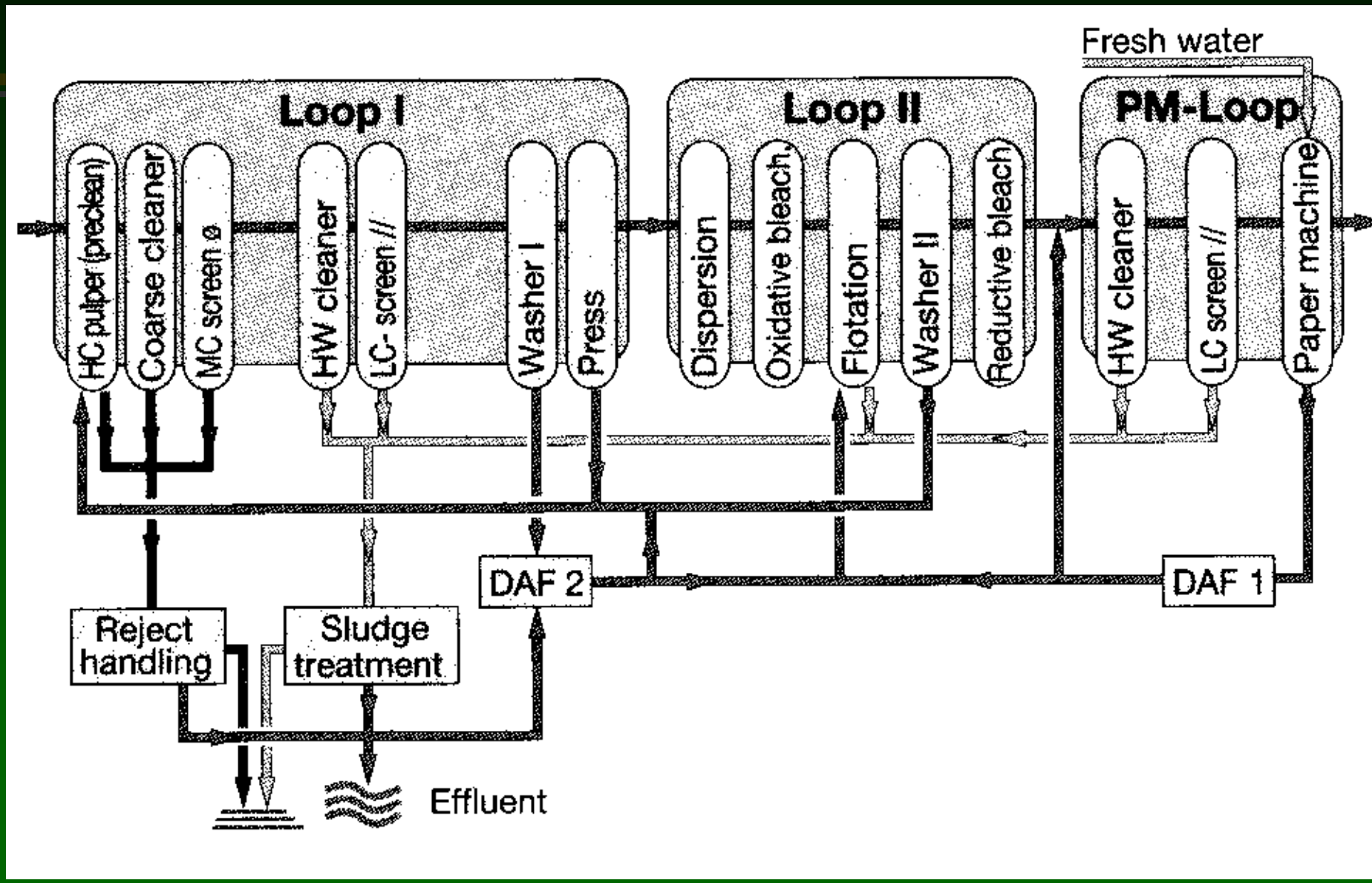

Deinking of Printing Grades for Printing/Writing

- Used to produce new printing and writing grades
- May use mixed or sorted waste ($ vs production trade-off)
- Note the strategy:
  - 1st remove coarse contaminants
  - 2nd remove smaller contaminants, deinking
  - 3rd disperse unremoved contaminants
  - 4th bleach to high brightness
- Most complex system to produce highest standard pulp
- Extensive water recycling
  - Multiple water loops: pseudo countercurrent water-pulp flows

High Grade Printing and Writing Grades

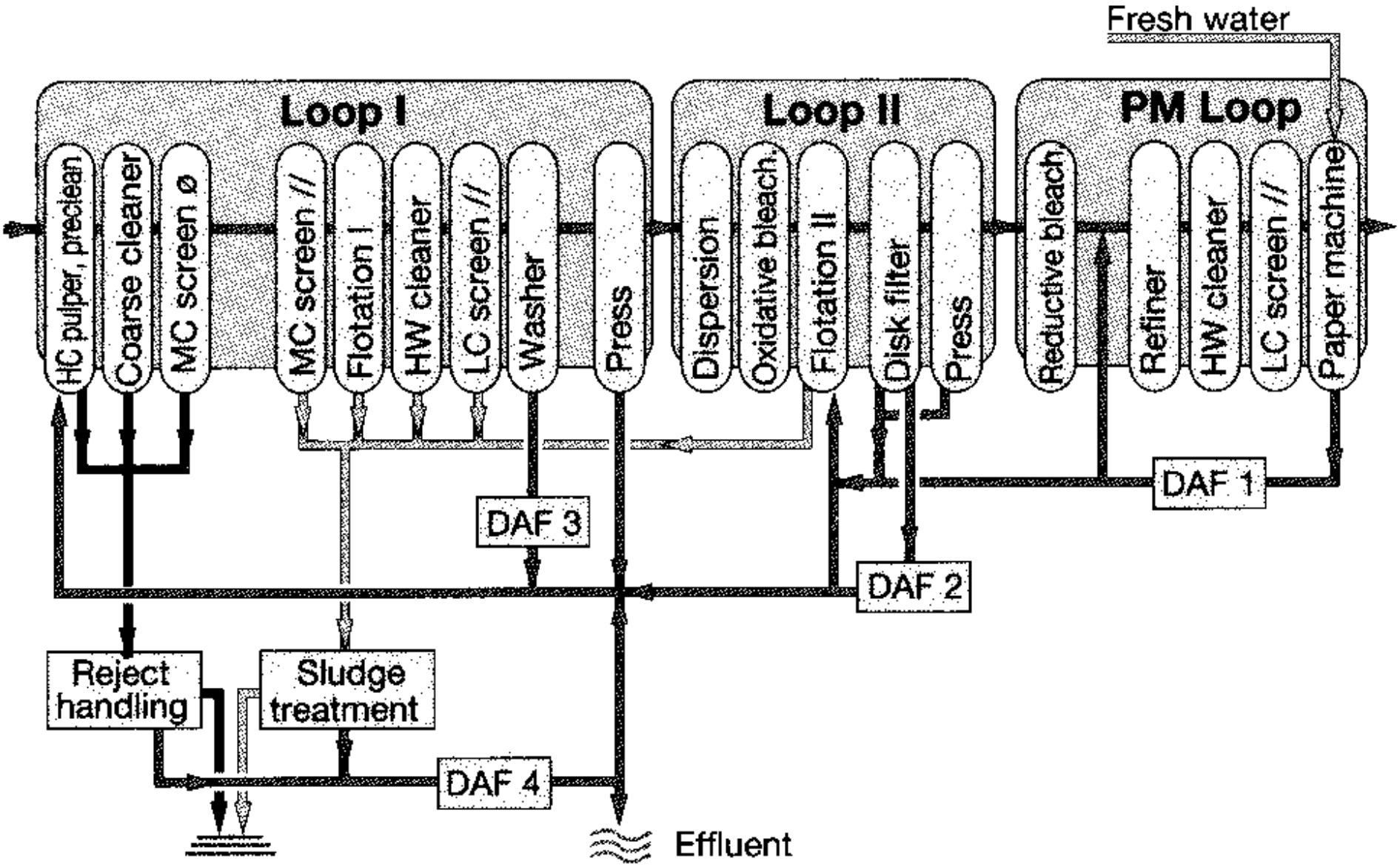

Paper Recycling Review

- Approximately _____ % of the paper in the US is recycled.
- The recovery rate has been _____ over the last 5 years in the US.
- Name 3 contaminants in recovered paper: _____ _____ _____
- OCC is recycled typically into _____
- Mixed office waste is typically recycled into _____ or _____
- _____ is a recycling operation used to remove large contaminants
- _____ is a recycling operation used to remove dense contaminants
- Name the two major de-inking operations: _____ and _____
- What type of recycled product does not typically use deinking processes to produce? _____

Paper Recycling: Effect on Environment

	Uncoated free sheet	50% Post consumer	100% Post consumer
Wood Use	3,467 tons	1,733 tons	0 tons
		1,733 tons less	3,467 tons less
Total Energy	38,364 million BTU's	30,011 million BTU's	21,658 million BTU's
		8,353 million BTU's less	16,707 million BTU's less
Purchased Energy	18,206 million BTU's	19,932 million BTU's	21,658 million BTU's
		1,726 million BTU's more	3,452 million BTU's more
Sulfur dioxide (SO2)	26,088 pounds	25,823 pounds	25,557 pounds
		265 pounds less	530 pounds less
Greenhouse Gases	5,690,196 lbs CO_2 equiv.	4,636,154 lbs CO_2 equiv.	3,582,112 lbs CO_2 equiv.
		1,054,042 lbs CO_2 equiv. less	2,108,084 lbs CO_2 equiv. less
Nitrogen oxides (NOx)	18,417 pounds	16,415 pounds	14,414 pounds
		2,002 pounds less	4,003 pounds less
Particulates	12,433 pounds	9,889 pounds	7,345 pounds
		2,544 pounds less	5,088 pounds less
Hazardous Air Pollutants (HAP)	2,150 pounds	1,151 pounds	151 pounds
		1,000 pounds less	1,999 pounds less
Volatile Organic Compounds (VOCs)	5,559 pounds	3,693 pounds	1,826 pounds
		1,867 pounds less	3,733 pounds less
Total Reduced Sulfur (TRS)	340 pounds	170 pounds	0 pounds
		170 pounds less	340 pounds less
Wastewater	19,075,196 gallons	14,700,098 gallons	10,325,000 gallons
		4,375,098 gallons less	8,750,196 gallons less
Biochemical Oxygen Demand (BOD)	6,288 pounds	6,174 pounds	6,060 pounds
		114 pounds less	228 pounds less
Total Suspended Solids (TSS)	10,143 pounds	8,522 pounds	6,900 pounds
		1,622 pounds less	3,243 pounds less
Chemical Oxygen Demand (COD)	91,744 pounds	59,672 pounds	27,600 pounds
		32,072 pounds less	64,144 pounds less
Adsorbable organic halogens (AOX)	932 pounds	466 pounds	0 pounds
		466 pounds less	932 pounds less
Solid Waste	2,278,349 pounds	1,716,525 pounds	1,154,701 pounds
		561,824 pounds less	1,123,648 pounds less

Papercalculator, Basis of 1000 tons of paper

Effects of Recycling on Pulps